2007
Honda CR85R/85RB EXPERT
OWNER'S MANUAL & COMPETITION HANDBOOK

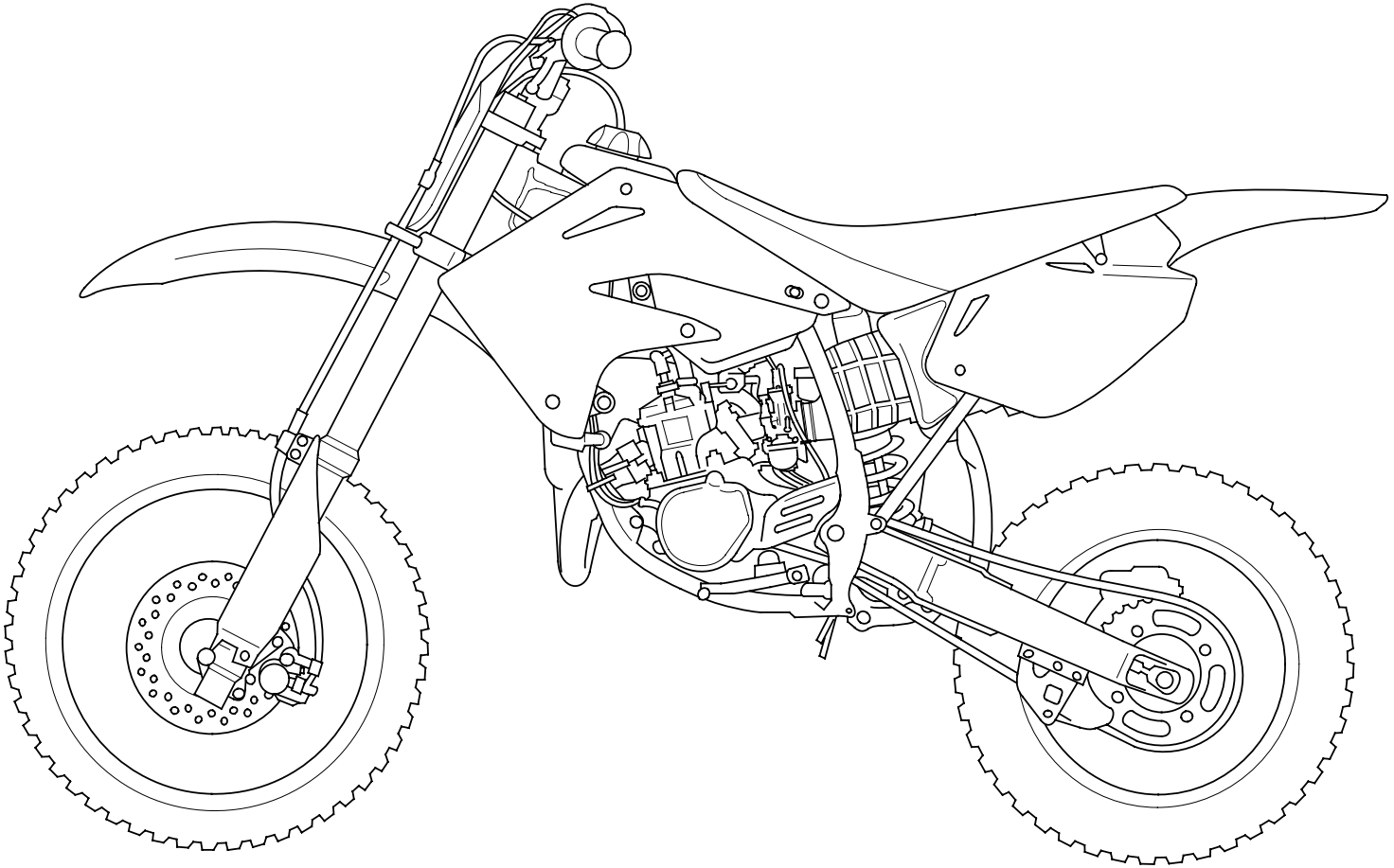

Introduction

Congratulations on choosing your Honda CR motocross motorcycle.

When you own a Honda, you're part of a worldwide family of satisfied customers-people who appreciate Honda's reputation for building quality into every product.

Your CR is a high performance racing motorcycle that utilizes the latest motocross technology and is intended for competition use in sanctioned, closed-course events by experienced riders only.

Be aware that motocross is a physically demanding sport that requires more than just a fine motorcycle. To do well, you must be in excellent physical condition and be a skillful rider. For the best results, work diligently on your physical conditioning and practice frequently.

Before riding, take time to get acquainted with your CR and how it works. To protect your investment, we urge you to take responsibility for keeping your CR well maintained. Scheduled service is a must, of course. But it's just as important to observe the break-in guidelines, and perform all the pre-ride and other periodic checks detailed in this manual.

You should also read the owner's manual before you ride. It's full of facts, instructions, safety information, and helpful tips. To make it easy to use, the manual contains a table of contents, a detailed list of topics at the beginning of each section, and an index at the back of the book.

As you read this manual, you will find information that is preceded by a **NOTICE** symbol. This information is intended to help you avoid damage to your Honda, other property, or the environment.

Unless you are mechanically qualified and have the proper tools, you should see your Honda dealer for the service and adjustment procedures discussed in this manual.

The official Honda Service Manual for your CR is available (page 120). It is the same manual your dealer uses. If you plan to do any service on your CR beyond the standard maintenance procedures in this manual, you will find the Service Manual a valuable reference.

If you have any questions, or if you ever need a special service or repairs, remember that your Honda dealer knows your CR best and is dedicated to your complete satisfaction.

Please report any change of address or ownership to your Honda dealer so we will be able to contact you concerning important production information.

You may also want to visit our website at www.honda.com.

Happy riding!

California Proposition 65 Warning
WARNING: This product contains or emits chemicals known to the State of California to cause cancer and birth defects or other reproductive harm.

A Few Words About Safety

Your safety, and the safety of others, is very important. And operating this motorcycle safely is an important responsibility.

To help you make informed decisions about safety, this manual contains a section devoted to *Motorcycle Safety*, as well as a number of Safety Messages throughout the manual.

Safety Messages are preceded by a safety alert symbol ⚠ and one of three signal words: **DANGER**, **WARNING**, or **CAUTION**.

These signal words mean:

⚠ DANGER **You WILL be KILLED or SERIOUSLY HURT if you don't follow instructions.**

⚠ WARNING **You CAN be KILLED or SERIOUSLY HURT if you don't follow instructions.**

⚠ CAUTION **You CAN be HURT if you don't follow instructions.**

Of course, it is not practical or possible to warn you about all hazards associated with operating or maintaining a motorcycle. You must use your own good judgement.

Contents

MOTORCYCLE SAFETY 1
Important Safety Information.....2
Important Safety Precautions.....2
Important Message to Parents.....2
Accessories & Modifications 3
Safety Labels 4

OPERATING CONTROLS.....5
Operation Component Locations 6

BEFORE RIDING.....7
Are You Ready to Ride?.....8
Is Your Motorcycle Ready to Ride? 9
Pre-ride Inspection.....9

BASIC OPERATING INSTRUCTIONS.....11
Safe Riding Precautions.....12
Starting & Stopping the Engine 13
Preparation 13
Starting Procedure 13
Flooded Engine.....13
How to Stop the Engine.....14
Shifting Gears.....15
Break-in Guidelines 16

SERVICING YOUR HONDA 17
Before You Service Your Honda
The Importance of Maintenance 18
Maintenance Safety 19
Important Safety Precautions.....19
Maintenance Schedule 20
General Competition Maintenance 22
Before & After Competition Maintenance.....26
Between Motos & Practice Maintenance 26
After Competition Maintenance 27

Service Preparations
Maintenance Component Locations.....28
Seat Removal.....29
Fuel Tank Removal 30
Subframe Removal 32

Service Procedures
Fluid & Filters
Fuel System 34
Transmission Oil 36
Coolant 38
Air Cleaner 40

Engine
Throttle 42
Clutch System 44
Spark Plug 46
Cylinder System 47

Chassis
Suspension.....52
Brakes.....57
Wheels.....61
Tires & Tubes 62
Drive Chain 64
Expansion Chamber 67
Additional Maintenance Procedures 68

Appearance Care 69

ADJUSTMENTS FOR COMPETITION 71
Front Suspension Adjustments.....72
Rear Suspension Adjustments.....80
Suspension Adjustments for Track Conditions 84
Suspension Adjustment Guidelines.....85
Carburetor Adjustments & Tuning Tips.....88
Chassis Adjustments.....95
Gearing 96
Tire Selection for Track Conditions.....97
Personal Fit Adjustments 98

TIPS 99
Transporting Your Motorcycle 100
Storing Your Honda.....101
You & the Environment 102
Troubleshooting.....103

TECHNICAL INFORMATION 105
Vehicle Identification 106
Specifications 107
Torque Specifications.....109
High Altitude Carburetor Adjustment.....111
Oxygenated Fuels.....112
Competition Logbook 113
Optional Parts List.....115
Spare Parts & Equipment.....117
Wiring Diagram.....118

CONSUMER INFORMATION 119
Authorized Manuals 120
Contacting Honda.....121
Your Honda Dealer.....122
The Honda Rider's Club (USA only) 123

TABLE OF CONTENTS 124

INDEX 126

QUICK REFERENCE

Motorcycle Safety

This section presents some of the most important information and recommendations to help you ride your CR safely. Please take a few moments to read these pages. This section also includes information about the location of the safety label on your CR.

Important Safety Information.....2
Important Safety Precautions.....2
Important Message to Parents.....2
Accessories & Modifications 3
Safety Labels 4

Important Safety Information

Important Safety Precautions

Your CR can provide many years of pleasure, if you take responsibility for your own safety and understand the challenges you can meet in competitive racing.

As an experienced rider, you know there is much you can do to protect yourself when you ride. The following are a few precautions we consider most important.

Never Carry a Passenger.
Your CR is designed for one operator only. Carring a passenger can cause an accident in which you and others can be hurt.

Wear Protective Gear.
Whether you're practicing to improve your skills, or riding in competition, always wear an approved helmet, eye protection, and proper protective gear.

Take Time to Get to Know Your CR.
Because every motorcycle is unique, take time to become thoroughly familiar with how this one operates and responds to your commands before placing your machine, and yourself, in competition.

Learn and Respect Your Limits.
Never ride beyond your personal abilities or faster than conditions warrant. Remember that alcohol, drugs, illness and fatigue can reduce your ability to perform well and ride safety.

Don't Drink and Ride.
Alcohol and riding don't mix. Even one drink can reduce your ability to respond to changing conditions, and your reaction time gets worse with every additional drink. So don't drink and ride, and don't let your friends drink and ride either.

Keep Your Honda in Safe Condition.
Maintaining your CR properly is critical to your safety. A loose bolt, for example, can cause a breakdown in which you can be seriously injured.

Important Message to Parents

Your child's safely is very important to Honda. That's why we urge you to read this message before you let any young person ride this motorcycle. Competitive riding can be fun. But bad judgement can result in injury, and we don't want that to happen. As a parent, you can help prevent accidents by making good decisions about when and how your youngster rides this motorcycle.

- Remember, this CR is designed only for competition use by experienced junior riders. It is an operator only model, and the maximum load capacity is 150 lbs. Rider weight must not exceed this limit.
- The junior rider must be tall enough to hold the motorcycle up while straddling it with both feet on the ground. He or she must also be strong enough to pick up the motorcycle if it is on its side.
- The parent and junior rider must be fully familiar with the motorcycle, the motorcycle controls and control functions. Both must also Fully understand everything in this manual before riding begins.
- For your child's safely, be sure to make pre-practice and pre-race inspections, and impress on the junior rider the importance of checking all the items thoroughly before riding.

Accessories & Modifications

Installing non-Honda accessories, removing original equipment, or modifying your CR in any way that would change its design or operation, could seriously impair your CR's handling, stability, and braking, making it unsafe to ride.

⚠ WARNING

Improper accessories or modifications can cause a crash in which you can be seriously hurt or killed.

Follow all instructions in this owner's manual regarding modifications and accessories.

Safety Labels

Read this label carefully and don’t remove it.

If the label comes off or becomes hard to read, contact your Honda dealer for replacement.

IMPORTANT INFORMATION

Operator only. No passengers. This Honda Motorcycle is sold as is wihtout warranty, and the entire risk as to quality and performance is with the buyer. Read owner's manual.

This vehicle is designed, manufactured and sold for competition use only. It does not conform to Federal Motor Vehicle Safety Standards or U.S. EPA Noise and Emissions Standards. Operation on public streets, roads, highways or for off-road recreation is illegal.

State and Federal laws prohibit operation of this vehicle except in an organized racing or competitive event on a closed course. Or by permit issued by the local governmental agency having jurisdiction.

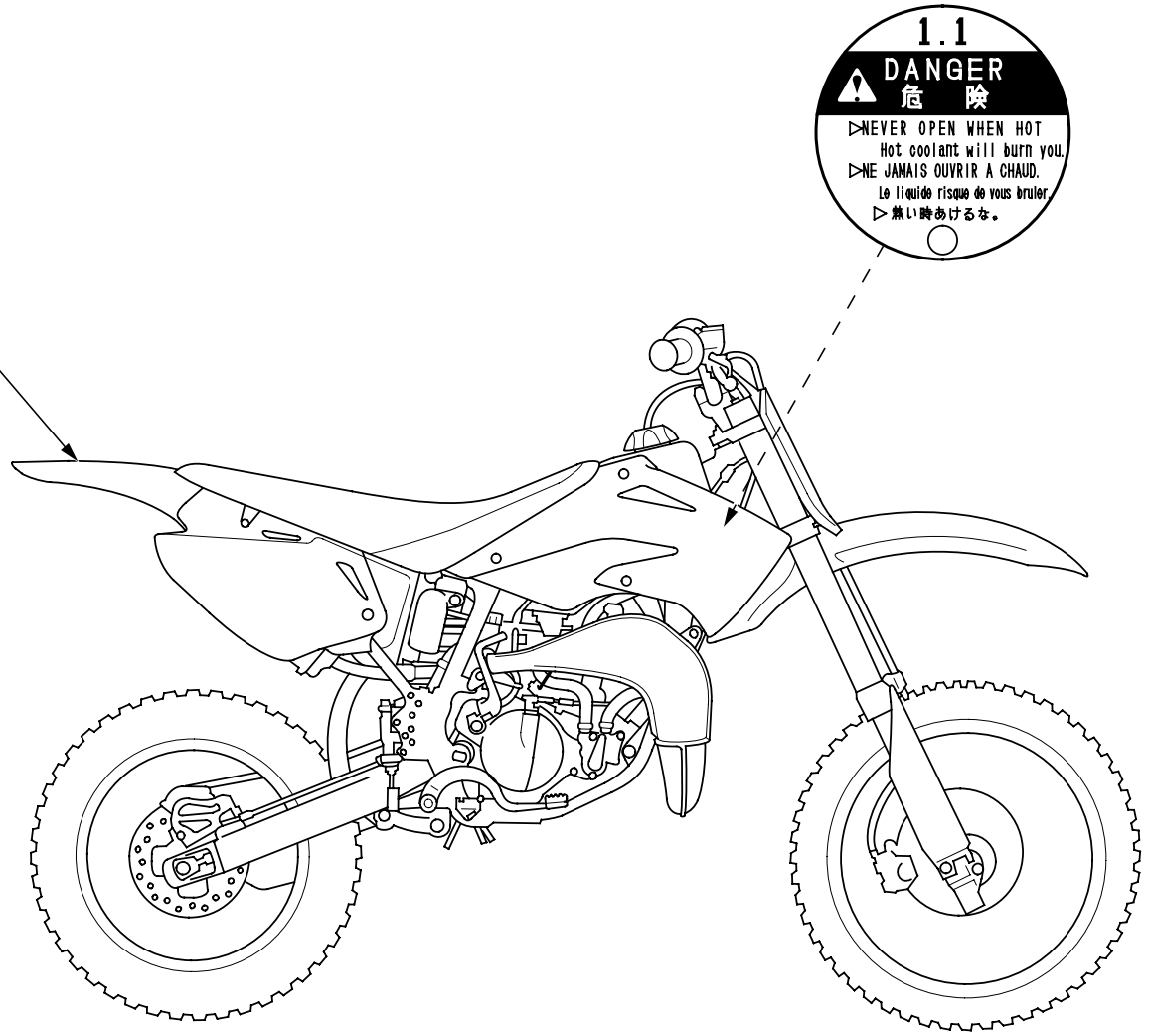

Operating Controls

Read this section carefully before you ride. It presents the location of the basic controls on your CR.

Operation Component Locations 6

Operation Component Locations

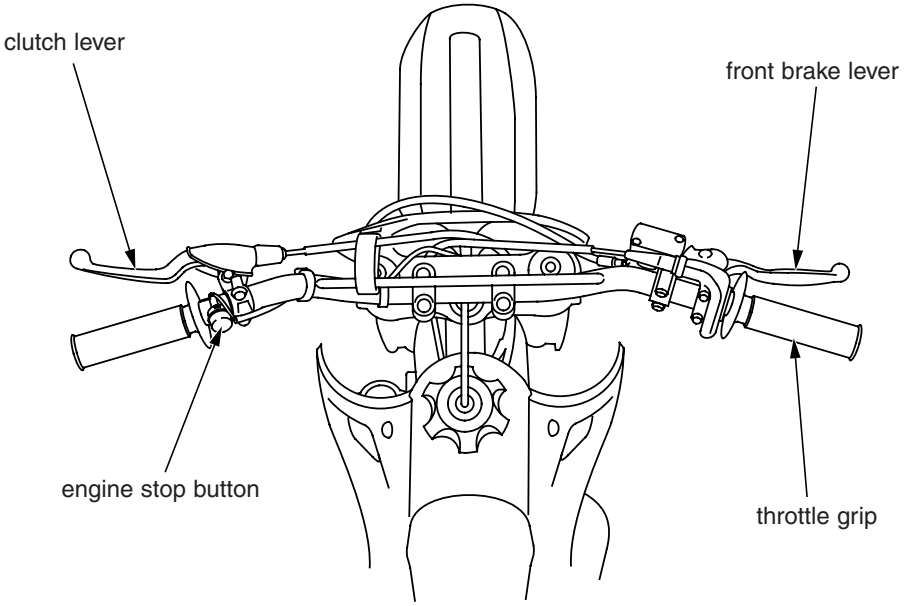

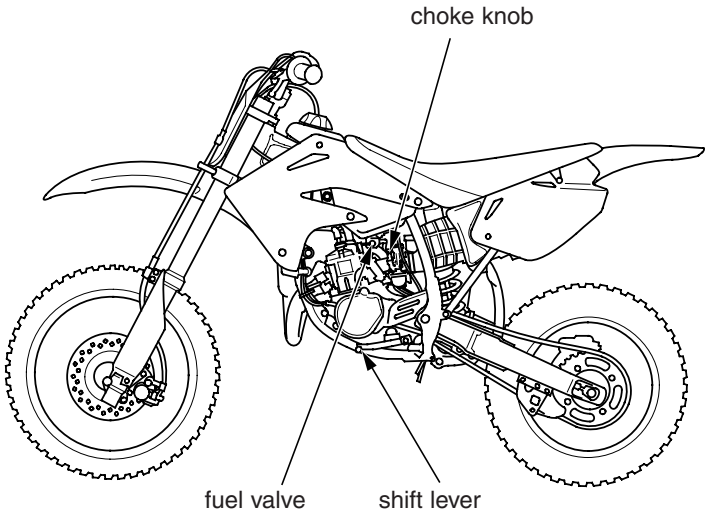

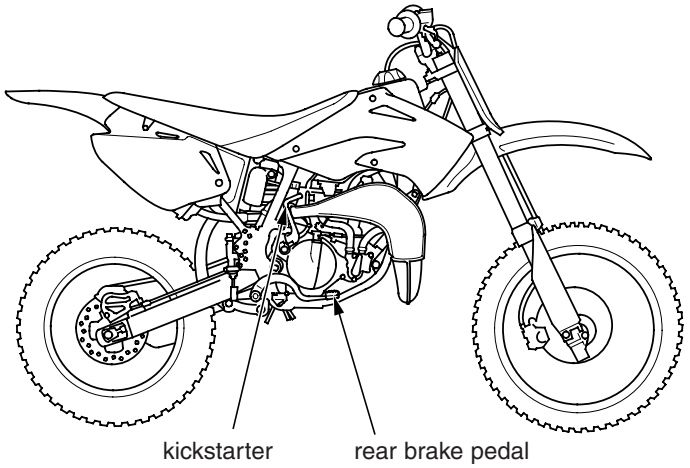

Before Riding

Before each ride, you need to make sure you and your Honda are both ready to ride. To help get you prepared, this section discusses how to evaluate your riding readiness, and what items you should check on your CR.

For information about suspension, carburetor, and other adjustment for competition, see page 71.

Are You Ready to Ride?.....8
Is Your Motorcycle Ready to Ride?.....9
Pre-ride Inspection.....9

Are You Ready to Ride?

Before riding your CR for the first time, we strongly recommend that you read this owner's manual, make sure you understand the safety messages, and know how to operate the controls.

Before each ride, it's also important to make sure you and your CR are both ready to ride.

For information about suspension, carburetor, and other adjustments for competition, see page 71.

Whether you're preparing for competition or for practice, always make sure you are.

- In good physical and mental condition
- Free of alcohol and drugs
- Wearing an approved helmet, eye protection, and other appropriate riding gear

Although complete protection is not possible, wearing the proper gear can reduce the chance or severity of injury when you ride.

⚠ WARNING

Not wearing a helmet increases the chance of serious injury or death in a crash.

Be sure you always wear a helmet, eye protection and other protective apparel when you ride.

Competitive riding can be tough on a motorcycle, so it's important to inspect your CR and correct any problems you find before each ride. Check the following items (page numbers are at the right):

⚠ WARNING

Improperly maintaining this motorcycle or failing to correct a problem before riding can cause a crash in which you can be seriously hurt or killed.

Always perform a pre-ride inspection before every ride and correct any problems.

Pre-ride Inspection

Check the following before each ride:

- Transmission oil level 37
- Coolant for proper level.....38
- Cooling system and hoses for condition.....39
- Spark plug for proper heat range, carbon fouling and high tension cord terminal for looseness 46
- Air cleaner for condition and contamination.....40
- Clutch operation and freeplay.....44
- Steering head bearings and related parts for condition.....68
- Carburetor throttle operation 42
- Tires for damage or improper inflation pressure 62
- Spokes for looseness.....61
- Rim locks for looseness.....61
- Front and rear suspension for proper operation 52, 53
- Front and rear brakes, check operation 57
- Drive chain for correct slack and adequate lubrication 64
- Drive chain guide, slider and guide roller for damage or wear.....64
- Expansion chamber springs for damage or lack of tension.....67
- Every possible part for looseness (such as cylinder head nuts, carburetor insulator bolts, engine mounting bolts, axle nuts, handlebar holder bolts, fork bridge pinch bolts, drive chain adjusters, drive chain guide, kickstarter mounting bolts and wire harness connectors).....68, 109, 110

Basic Operating Instructions

This section gives basic information on how to start and stop your engine as well as break-in guidelines.

Safe Riding Precautions.....12
Starting & Stopping the Engine.....13
Preparation.....13
Starting Procedure.....13
Flooded Engine.....13
How to Stop the Engine.....14
Shifting Gears.....15
Break-in Guidelines.....16

Safe Riding Precautions

Before riding your CR for the first time, please review the *Important Safety Precautions* beginning on page 2 and the previous section, titled *Before Riding*.

For your safety, avoid starting or operating the engine in an enclosed area such as a garage. Your CR's exhaust contains poisonous carbon monoxide gas which can collect rapidly in an enclosed area and cause illness or death.

Always follow the proper starting procedure described below.

Your CR can be kickstarted with the transmission in gear by pulling in the clutch lever before operating the kickstarter.

Preparation

Make sure that the transmission is in neutral. Turn the fuel valve ON.

Starting Procedure

Always follow the proper starting procedure described below.

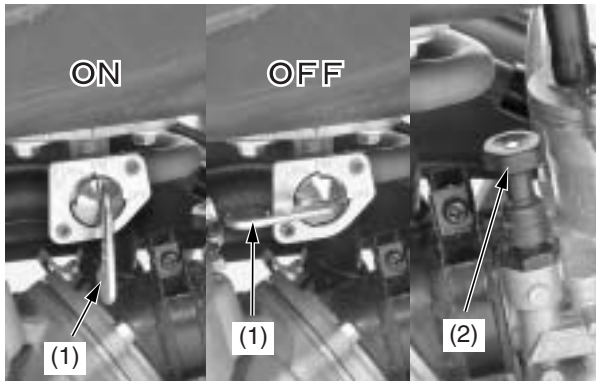

(1) fuel valve (2) choke knob

Check the transmission oil and coolant levels before starting the engine (pages 37, 38).

Cold Engine Starting
1. Turn the fuel valve (1) ON.
2. Shift the transmission into neutral.
3. Pull the choke knob (2) up.
4. With closed throttle, operate the kickstarter. Starting from the top of the kickstarter stroke, kick through to the bottom with a rapid, continuous motion.
5. After the engine starts, the choke knob should be pushed down as soon as possible to prevent spark plug fouling.
6. Allow the engine to warm up for at least 2 minutes before riding off, preferably until the side of the cylinder is very warm to the touch through your riding glove. Slowly increase rpm and don't blip the throttle. Warming the engine is important to prevent cold seizures.

Warm Engine Starting
1. Turn the fuel valve ON.
2. Shift the transmission into neutral.
3. Push the choke knob down.
4. Open the throttle (1/8 – 1/4) and operate the kickstarter.

Flooded Engine

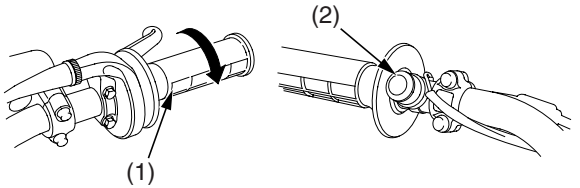

(1) throttle (2) engine stop button

If the engine fails to start after repeated attempts, it may be flooded with excess fuel. To clear a flooded engine:

1. Shift the transmission into neutral.
2. Push the choke knob down all the way to OFF.
3. Open the throttle (1) fully.
4. While pushing the engine stop button (2), crank the engine several times with the kickstarter.
5. Release the engine stop button.
6. Follow the *Warm Engine Starting* procedure.

How to Stop the Engine

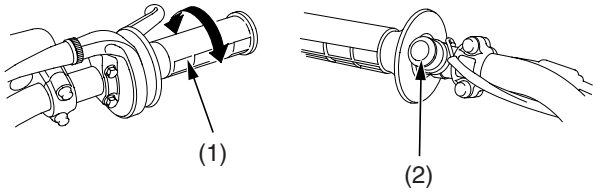

(1) throttle (2) engine stop button

Normal Engine Stop
1. Shift the transmission into neutral.
2. Turn the fuel valve OFF.
3. Lightly open the throttle (1) two or three times, and then close it.
4. Depress and hold the engine stop button (2) until the engine stops completely.

Failure to close the fuel valve may cause the carburetor to overflow, fill the crankcase with fuel and result in hard starting.

Emergency Engine Stop
To stop the engine in an emergency, press the engine stop button.

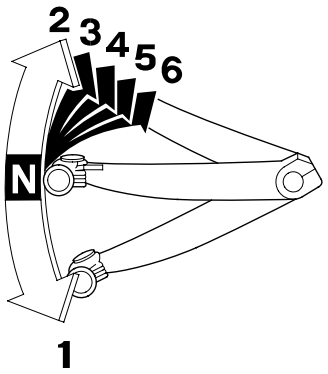

1. After the engine has been warmed up, the motorcycle is ready for riding.
2. While the engine is idling, pull in the clutch lever and depress the shift lever to shift into 1st (low) gear.
3. Slowly release the clutch lever and at the same time gradually increase engine speed by opening the throttle. Coordination of the throttle and clutch lever will assure a smooth positive start.

NOTICE

When moving off from a standing start, be careful not to use too much throttle. The motorcycle may "wheelie" over backwards.

4. When the motorcycle attains a moderate speed, close the throttle, pull in the clutch lever and shift to 2nd gear by raising the shift lever.
5. This sequence is repeated to progressively shift to 3rd, 4th, 5th, and 6th (top) gear. Raise the shift lever to shift to a higher gear and depress it to downshift. Each stroke of the shift lever engages the next gear in sequence. The shift lever automatically returns to the horizontal position when released.

NOTICE

Downshifting can help slow your motorcycle, especially on downhills. However, downshifting when engine rpm is too high can cause engine damage.

NOTICE

To prevent transmission damage, do not coast or tow the motorcycle for long distances with the engine off.

Break-in Guidelines

Help assure your CR's future reliability and performance by paying extra attention to how you ride during the first operating day or 15 miles (25 km).
During this period, avoid full-throttle starts and rapid acceleration.

This same procedure should be followed each time when:

- piston is replaced
- rings are replaced
- cylinder is replaced
- crankshaft or crankshaft bearings are replaced

Servicing Your Honda

Keeping your CR well maintained is absolutely essential to your safety. It's also a good way to protect your investment, get maximum performance, avoid breakdowns, and have more fun.

To help keep your CR in good shape, this section includes a Maintenance Schedule for required servicing and step-by-step instructions for specific maintenance tasks. You'll also find important safety precautions, information on oils, and tips for keeping your Honda looking good.

An ICM (Ignition Control Module) system is used on this motorcycle; consequently, routine ignition timing adjustment is unnecessary. If you want to check the ignition timing, refer to the Honda Service Manual (page 120).

An optional tool kit may be available. Check with your Honda dealer's parts department.

Before You Service Your Honda
The Importance of Maintenance 18
Maintenance Safety 19
Important Safety Precautions.....19
Maintenance Schedule 20
General Competition Maintenance 22
Before & After Competition Maintenance.....26
Between Motos & Practice Maintenance 26
After Competition Maintenance 27

Service Preparations
Maintenance Component Locations.....28
Seat Removal.....29
Fuel Tank Removal 30
Subframe Removal 32

Service Procedures

Fluids & Filters
Fuel System 34
Transmission Oil 36
Coolant 38
Air Cleaner 40

Engine
Throttle 42
Clutch System 44
Spark Plug 46
Cylinder System 47

Chassis
Suspension.....52
Brakes.....57
Wheels.....61
Tires & Tubes 62
Drive Chain 64
Expansion Chamber 67
Additional Maintenance Procedures 68

Appearance Care 69

The Importance of Maintenance

Keeping your CR well-maintained is absolutely essential to your safety. It's also a good way to get maximum performance during each moto. Careful pre-ride inspections and good maintenance are especially important because your CR is designed to be ridden in off-road competition.

Remember, proper maintenance is your responsibility. Be sure to inspect your CR before each ride and follow the Maintenance Schedule in this section.

⚠ WARNING

Improperly maintaining this motorcycle or failing to correct a problem before you ride can cause a crash in which you can be seriously hurt or killed.

Always follow the inspection and maintenance recommendations and schedules in this owner's manual.

This section includes instructions on how to perform some important maintenance tasks. Some of the most important safety precautions follow. However, we cannot warn you of every conceivable hazard that can arise in performing maintenance. Only you can decide whether or not you should perform a given task.

⚠ WARNING

Failure to properly follow maintenance instructions and precautions can cause you to be seriously hurt or killed.

Always follow the procedures and precautions in this owner's manual.

Important Safety Precautions

- Make sure the engine is off before you begin any maintenance or repairs.
  This will help eliminate several potential hazards:

  Carbon monoxide poisoning from engine exhaust. Be sure there is adequate ventilation whenever you operate the engine.

  Burns from hot motorcycle parts. Let the engine and exhaust system cool before touching.

  Injury from moving parts. Do not run the engine unless instructed to do so.

- Read the instructions before you begin, and make sure you have the tools and skills required.

- To help prevent the motorcycle from falling over, park it on a firm, level surface, using the optional work stand or a maintenance stand to provide support.

- To reduce the possibility of a fire or explosion, be careful when working around gasoline. Use only a non-flammable (high flash point) solvent such as kerosene —not gasoline— to clean parts. Keep cigarettes, sparks, and flames away from all fuel-related parts.

Maintenance Schedule

To maintain the safety and reliability of your CR, regular inspection and service is required as shown in the Maintenance Schedule that follows.

The Maintenance Schedule lists items that can be performed with basic mechanical skills and hand tools. Procedures for these items are provided in this manual.

The Maintenance Schedule also includes items that involve more extensive procedures and may require special training, tools, and equipment. Therefore, we recommend that you have your Honda dealer perform these tasks unless you have advanced mechanical skills and the required tools. Procedures for items in this schedule are provided in a service manual available for purchase from your dealer (page 120).

Service intervals in the maintenance schedule are expressed in terms of races and riding hours. To avoid overlooking required service, we urge you to develop a convenient way to record the number of races and/or hours you ride.

If you do not feel capable of performing a given task or need assistance, remember that your Honda dealer knows your CR best and is fully equipped to maintain and repair it. If you decide to do your own maintenance, use only genuine Honda parts or their equivalents for repair or replacement to ensure the best quality and reliability.

Perform the pre-ride inspection (page 9) at each scheduled maintenance period.

Summary of Maintenance Schedule Notes and Procedures:

Notes:
1. Clean after every moto for dusty riding conditions.
2. Replace every 2 years. Replacement requires mechanical skill.
3. Replace after the first break-in ride.

Maintenance Procedures:
I: inspect and clean, adjust, lubricate, or replace, if necessary
C: clean
L: lubricate
R: replace

Maintenance Schedule

All items should be checked before each competition event. See your Honda dealer unless you are mechanically qualified and have the proper tools.

Damage from competition use is not covered by the Distributor's Limited Warranty on your Honda.
Perform the Pre-ride Inspection at each scheduled maintenance period.
I: Inspect and Clean, Adjust, Lubricate or Replace if necessary. C: Clean. L: Lubricate. R: Replace.

Item \ Frequency	Note	Each race or about 2.5 hours	Every 3 races or about 7.5 hours	Every 9 races or about 22.5 hours	Ref. page
Throttle Operation		I			42
Air Filter	Note 1	C			40
Spark Plug		I	R		46
Radiator Coolant	Note 2	I			38
Cooling System		I			39
Cylinder Head Decarbonizing			C		48
Piston and Piston Rings			R		48
Piston Pin and Connecting Rod Small End Bearing				R	48
Reed Valve Only			R		49
Transmission Oil			R		36
Drive Chain		I, L	R		64 – 66
Drive Chain Slider		I			64
Drive Chain Roller		I			65
Drive Sprocket		I			66
Driven Sprocket		I			66
Brake Fluid	Note 2	I			58, 59
Brake Pads Wear		I			60
Brake System		I			57
Clutch System		I			44
Control Cables		I,L			68
Expansion Chamber/Silencer		I			67
Suspension		I			52, 53
Swingarm/Shock Linkage			L		25, 53
Fork Oil	Note 3		R		54
Wheels/Tires		I			61 – 63
Nuts, Bolts, Fasteners		I			68, 109, 110
Steering Head Bearing				I	68

This maintenance schedule is based upon average riding condition. Machines subjected to severe use require more frequent servicing.
NOTE: 1. Clean after every moto (heat) for dusty riding conditions.
2. Replace every 2 years. Replacement requires mechanical skill.
3. Replace after the first break-in ride.

General Competition Maintenance

Perform maintenance on firm, level ground using the optional workstand, or equivalent support.

When tightening bolts, nuts or screws, start with the larger diameter or inner fasteners, and tighten them to the specified torque using a crisscross pattern.

Use genuine Honda parts or their equivalent when servicing your CR.

Clean parts in non-flammable (high flash point) cleaning solvent (such as kerosene) when disassembling. Lubricate any sliding surface, O-rings, and seals before reassembling. Grease parts by coating or filling where specified.

After any engine disassembly, always install new gaskets, O-rings, cotter pins, piston pin clips, snap rings, etc. when reassembling. After reassembly, check all parts for proper installation and operation.

All Pre-ride Inspection Items
Refer to *Pre-ride Inspection* in your Owner's Manual, page 9.

Handgrips
Always use Pro Honda Handgrip Cement (U.S.A only) or Honda Bond A when replacing handgrips.

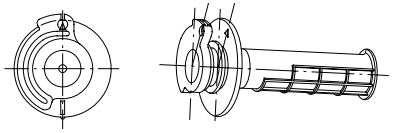

Throttle Grip
Align the "Δ" mark on the throttle grip with the hole of the throttle cable guide. Left handlebar grip: Align the top of the waffle pattern on the grip with the clutch lever as shown in the illustration.
Refer to the Service Manual for installation instructions.

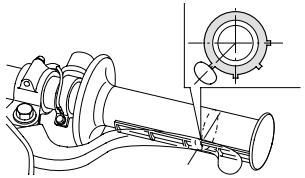

For added security, you may choose to safety wire the handgrips to the handlebar and throttle to prevent the possibility of them loosening. Position the twisted wire ends away from your palms and be sure to bend the wire ends well into the grip rubber so they will not snag your glove.

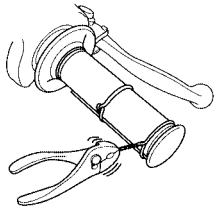

Throttle Control
Remove the throttle control every few rides, clean the inside of the drum and the handlebar thoroughly, and apply a light coating of silicone lubricant. Inspect the cable carefully for kinks or other damage that may restrict throttle control in any way. Move the handlebar from lock to lock to be sure there is no cable interference. Check to be sure the top of the carburetor is screwed on tight. Make certain the throttle operation is perfect after servicing and inspecting.

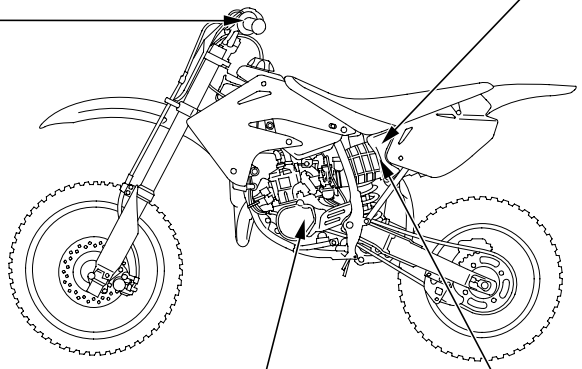

Transmission Oil
Drain and replace transmission oil often to ensure the greatest service life of the transmission and clutch. Frequent oil changes will also assure consistent performance of both shifting and clutch action (page 36).

Air Cleaner
Clean and oil your air cleaner regularly because the volume of air able to pass through it has a great effect on performance. Both engine performance and long term durability may be affected by an air cleaner that has deteriorated and allows dirt to pass. Inspect the air cleaner closely each time it's serviced for evidence of small tears or seam separation. Keep a spare air cleaner oiled and ready to install, sealed in a plastic bag. Riding in dusty conditions may require servicing the air cleaner or replacing it with a pre-serviced air cleaner between motos. Be careful not to over oil the air cleaner. While it is important to oil the air cleaner thoroughly, over oiling will cause an overall rich running condition, probably more noticeable off idle and in low rpm performance. Follow the servicing instructions in the Maintenance section. Use Pro Honda Foam Filter Oil or an equivalent. Be sure to grease the air cleaner flange where it contacts the air cleaner housing. Pro Honda White Lithium Grease, or an equivalent, is handy for this because any dirt that penetrates this sealing area will show up clearly (page 40).
Use the Honda genuine air cleaner or an equivalent air cleaner specified for your model.
Using the wrong Honda air cleaner or a non-Honda air cleaner which is not of equivalent quality may cause premature engine wear or performance problems.

Air Cleaner Housing Sealing
Remove and reseal the air cleaner housing boot where it connects to the air cleaner housing with silicone sealer if there is any doubt to its sealing integrity. Use Pro Honda Hondalock or an equivalent on the attaching studs. Inspect the air cleaner and air intake tract regularly for signs of deterioration or dirt penetration.

General Competition Maintenance

Spark Plug
Some non-resistor plugs may cause ignition problems. Refer to the recommendations elsewhere in this manual for specific types so you will be sure to use the proper reach and heat range. Replace periodically as specified in the Maintenance Schedule (page 21).

Spark Plug Cap
Install a small plastic tie-wrap around the spark plug cap to reduce any possibility of it loosening or of water penetration.

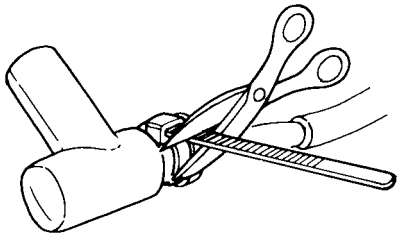

Electrical Connectors
Clean electrical connectors and wrap them with electrical tape to reduce the possibility of unwanted disconnections, water shorts or corrosion. Additional corrosion protection is offered by using Pro Honda Dielectric Grease on all electrical connections.

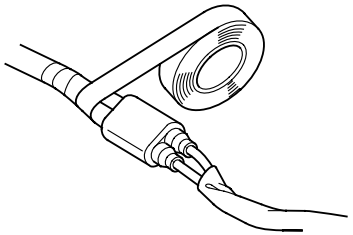

Engine Mounting Bolts
Make sure the engine mounting bolts are tightened to the proper torque specification. For added peace of mind, remove the nuts, clean the threads, and apply Pro Honda Hondalock or an equivalent prior to torquing the nuts.

Gaskets
Always use new gaskets when reassembling components.

Cylinder Removal
Put a little grease on the cylinder mounting dowels to prevent corrosion from dissimilar metals. The tolerances are quite tight, so it's important to keep these dowels absolutely clean (page 47).

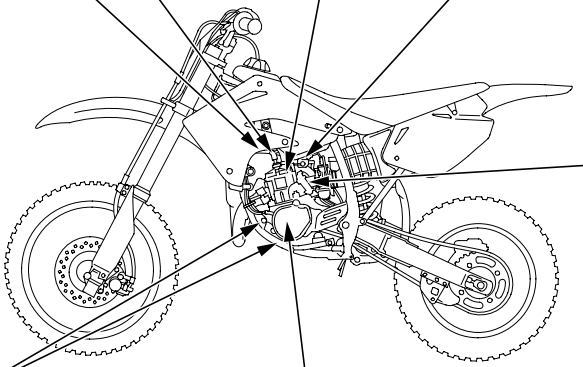

Ignition
Remove the alternator cover and keep it off for a few hours after each washing to let condensation evaporate. Pull the flywheel rotor every few rides and clean it and its crankshaft mounting surface, the alternator stator, the ignition pulse generator pickup and the entire ignition cavity thoroughly. The presence of dirt between the ignition pulse generator and the flywheel makes the ignition control module compensate to maintain the ignition curve. Cleaning dirt from the ignition side main seal helps to prevent premature seal wear. Close inspection of this seal can reveal a leakage problem before engine damage occurs.

Fuel Filter
Periodically drain the fuel from the tank, remove and clean the fuel valve/filter. Replace the fuel valve O-ring if there are any signs of damage or deterioration (page 35).

Fuel Contamination
Periodically drain the float bowl and inspect the carburetor for contamination from dirt (page 92).

Inlet Tract Sealing
Air leaks around the carburetor insulator and reed valve assembly should be cured by disassembling, cleaning and resealing with new gaskets and some sealing agent. Be careful not to overtighten the mounting bolts — this is the most common cause for leaks here. Inspect the mating surfaces, for warpage due to over-torquing.

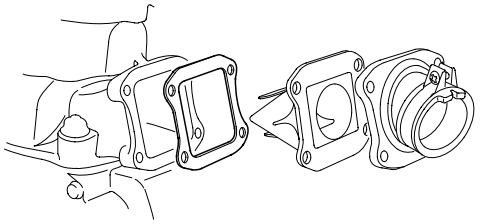

Pressure/Vacuum Leak-Down Test
Perform this test at regular intervals to minimize the possibility of engine damage from air leaks.

Swingarm Pivot Lubrication
Clean, inspect and lubricate when servicing suspension linkage pivots. Be sure all of the suspension pivot seals are in good condition. Use Pro Honda Moly 60 Paste (U.S.A. only) or molybdenum disulfide paste (containing more than 40% molybdenum disulfide additive).

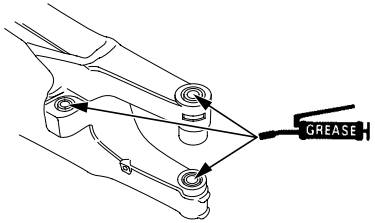

Suspension Linkage Lubrication
Disassemble, clean, inspect and lubricate all pivot bearings after each 7.5 hours of running time in order to maintain proper suspension performance and minimize component wear. Use Pro Honda Moly 60 Paste (U.S.A. only) or molybdenum disulfide paste (containing more than 40% molybdenum disulfide additive).

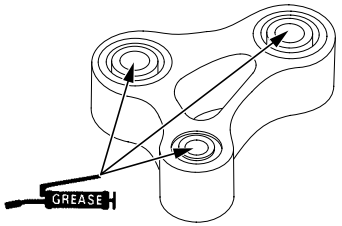

Swingarm
Do not attempt to weld or otherwise repair a damaged swingarm. Welding will weaken the swingarm.

Footpegs
Worn footpeg teeth can be repaired by filing the grooves between the teeth with a triangular-shaped file.
Be aware that filing them too sharp will reduce boot sole lifespan. Sharpen only the points of the teeth. Filing the grooves deeper will weaken the footpegs. Be sure the pegs are free to pivot freely and that the pivot pin retaining cotter pins are in good condition.

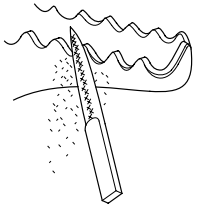

Brake Fluid Replacement
Refer to *Brake Pad Wear* on page, page 60.
Brake Caliper Inspection: Be sure both the front and rear calipers are able to move freely on the caliper bracket pins. Check pad thickness periodically and replace the pads when minimum thickness is reached. If the brakes fade when they are hot, inspect the pads for glazing or damage, and replace if necessary.
Brake Fluid Replacement: Replace the hydraulic fluid in the brake system every two years. Replace the fluid more frequently if you subject your brakes to severe use. Heavy braking heats the brake fluid and it may deteriorate sooner than expected. Any type of riding, that requires frequent use of the brakes, such as in tight woods, can shorten the service life of brake fluid.

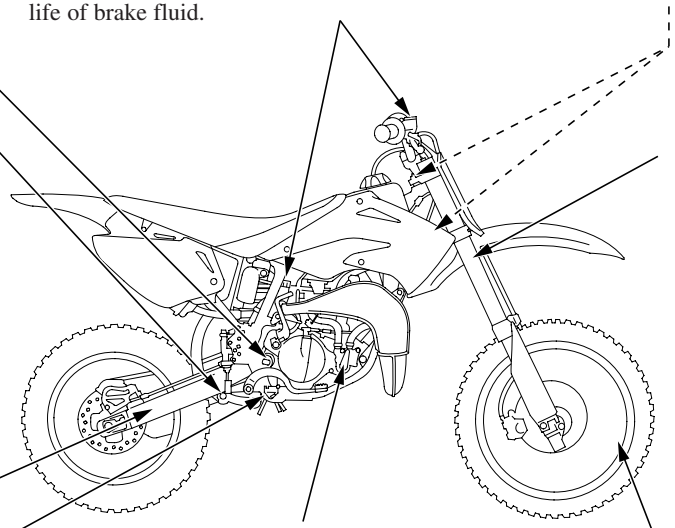

Water Pump Inspection Hole
After every race, check the inspection hole, located just below the water pump cover on the right crankcase cover. Clean away any clogged dirt or sand, if necessary. Look for coolant or oil leakage. Leaking coolant indicates a worn or damaged water seal. Leaking oil indicates a bad transmission oil seal. If replacement is necessary, both seals should be replaced.

Steering Head Bearings
Periodically clean, inspect and regrease the steering head bearings — especially if wet, muddy or extremely dusty courses are encountered often. Use urea based multi-purpose grease designed for high temperatute, high pressure performance (example: EXELITE EP2 manufactured by KYODO YUSHI, Japan or Shell Stamina EP2 or equivalent)

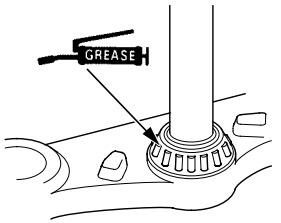

Fork Oil/Performance
Disassemble, clean and inspect the fork and replace the oil regularly. Contamination due to the tiny metal particles produced from the normal action of the fork, as well as normal oil breakdown, will deteriorate the performance of the suspension. Refer to the Honda Service Manual. Use only Pro Honda HP Fork Oil 5W (U.S.A. only) or equivalent which contains special additives to assure maximum performance of your CR's front suspension.

Frame
Because your CR is a high-performance machine, the frame should not be overlooked as part of your overall competition maintenance program. Periodically inspect the frame closely for possible cracking or other damage. It makes good racing sense.

Spokes
Check spoke tension frequently between the first few rides. As the spokes, spoke nuts and rim contact points seat-in, the spokes may need to be retightened. Once past this initial seating-in period, the spokes should hold their tension. Still, be sure your race maintenance program includes checking spoke tension and overall wheel condition on a regular basis (page 61).

Nuts, Bolts, Etc
Application of a thread locking agent to essential fasteners offers added assurance and security. Remove the nuts, clean the threads of both the nuts and bolts, apply Pro Honda Hondalock or an equivalent and tighten to the specified torque.

Between Motos & Practice Maintenance

After practice or between motos you have a chance to make additional checks and adjustments.

- Clean accumulated dirt from under the fenders and off the wheels, suspension components, hand grips, controls, and footpegs. A stiff, nylon parts cleaning brush works well.
- Check tire air pressure.
- Check spoke tension and rim lock nut security.
- Check sprocket bolt and nut security.

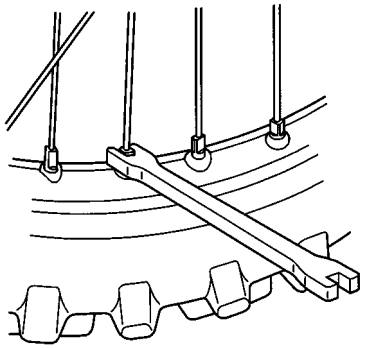

- Clean the sides of the drive chain with a stiff, nylon parts-cleaning brush. Lubricate and adjust the chain as necessary.

Do not perform maintenance while engine is running. Injury to your fingers or hands may result.

- After adjustment, check that the chain adjuster index marks (1) are in the same position on each side. This will ensure that the rear wheel is in proper alignment and allow maximum performance from the rear disc brake. Maintaining proper wheel alignment will also extend brake pad wear.

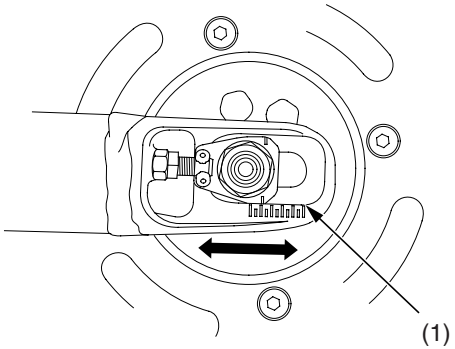

(1) chain adjuster index marks

- Suspend the front wheel above the ground and use the pressure release screws (2) to release the built-up pressure (in excess of normal atmospheric pressure: 0 psi) in the fork tubes. This pressure is caused by normal fork action while riding. (If you are riding at altitude, remember that fork pressure of 0 at sea level will increase as elevation increases.)

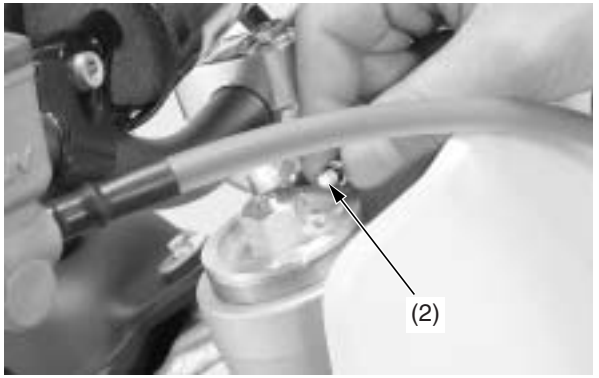

(2) pressure release screws

- Be sure the fuel and oil is mixed well by agitating it thoroughly before pouring pre-mix into the fuel tank.

⚠ WARNING

Gasoline is highly flammable and explosive. You can be burned or seriously injured when handling fuel.

- Stop the engine and keep heat, sparks and flame away.
- Handle fuel only outdoors.
- Wipe up spills immediately.

After Competition Maintenance

It is important to the long term performance of your CR to practice a consistent maintenance program. Right after the event is a good time to begin your next maintenance cycle.

After Race Lubrication
Apply a light coating of rust-inhibiting oil to the drive sprocket and any steel portions of the chassis or engine where the paint has worn away. This will prevent rusting of the exposed metal. Apply rust-inhibiting oil more heavily if the event was particularly wet or muddy. Take care to avoid spraying any oil near the disc brakes or the disc rotors.

Remove the drive chain, clean and lubricate it (page 65). Be sure the chain is wiped clean and is dry before lubricating the chain.

Take care to prevent catching your fingers between the chain and sprockets.

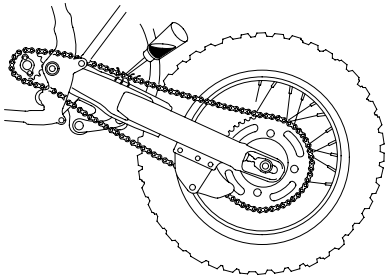

Routine Cleaning
If your CR is only slightly dirty, it is best to clean it by hand with the aid of a stiff bristled nylon brush and some clean rags.

Take care to prevent catching your fingers between the chain and sprockets.

A variety of reasonably priced cleaning brushes are available from variety, drug, food, and hardware stores. Some of these brushes are extremely useful in removing dirt from the many tight contours of the metal pieces of your CR. Avoid using stiff, abrasive brushes on the plastic or rubber parts.

If your CR was exposed to sea air or salt water, rinse it as soon as possible after the event, dry it, and apply a spray lubricant to all metal parts.

If you decide to wash your CR or use cleaners, refer to *Appearance Care* (page 69).

Maintenance Component Locations

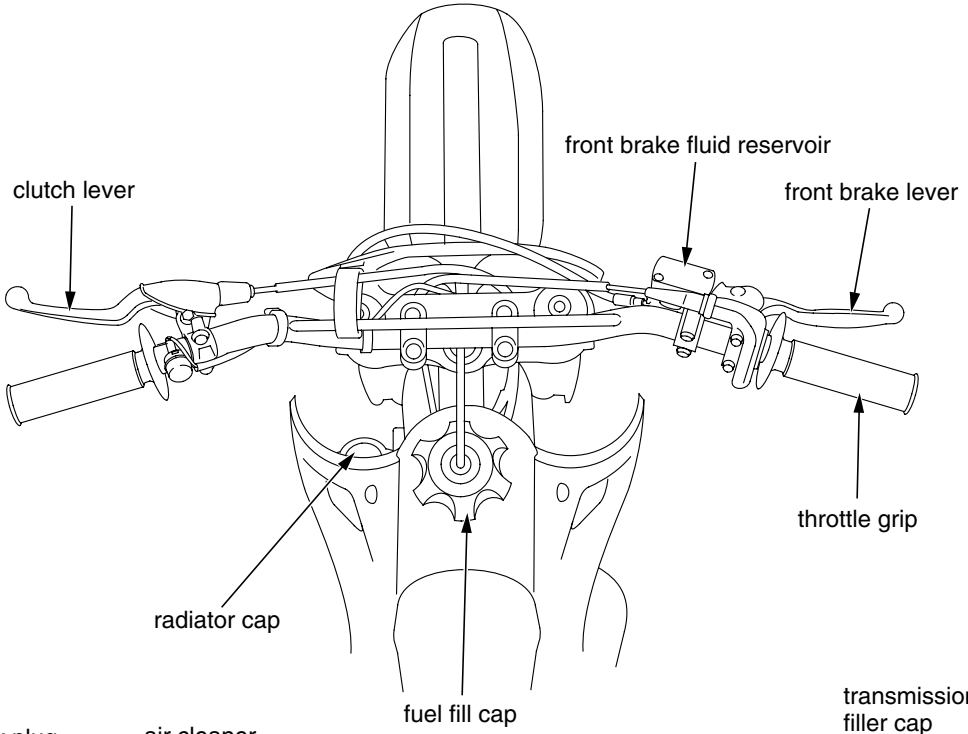

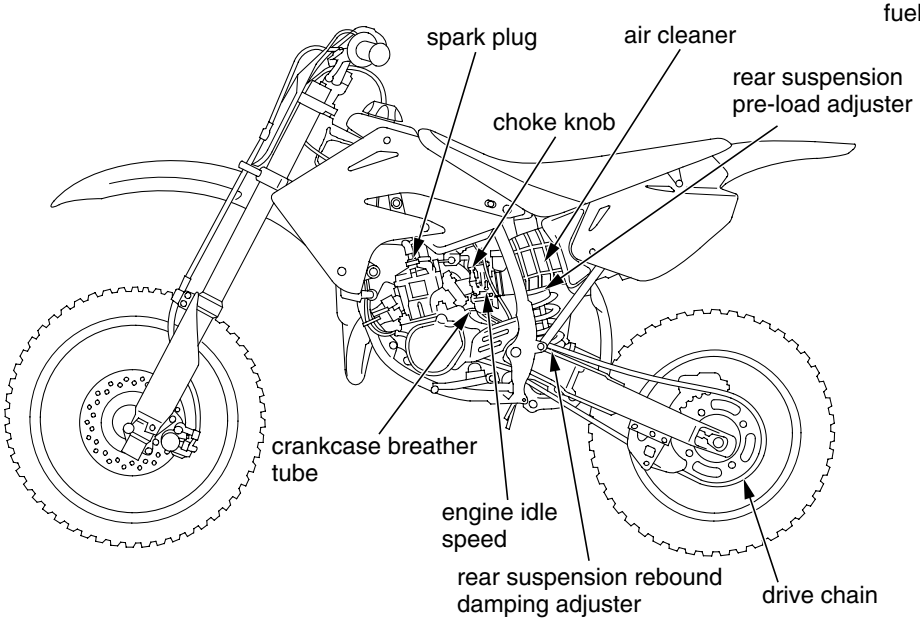

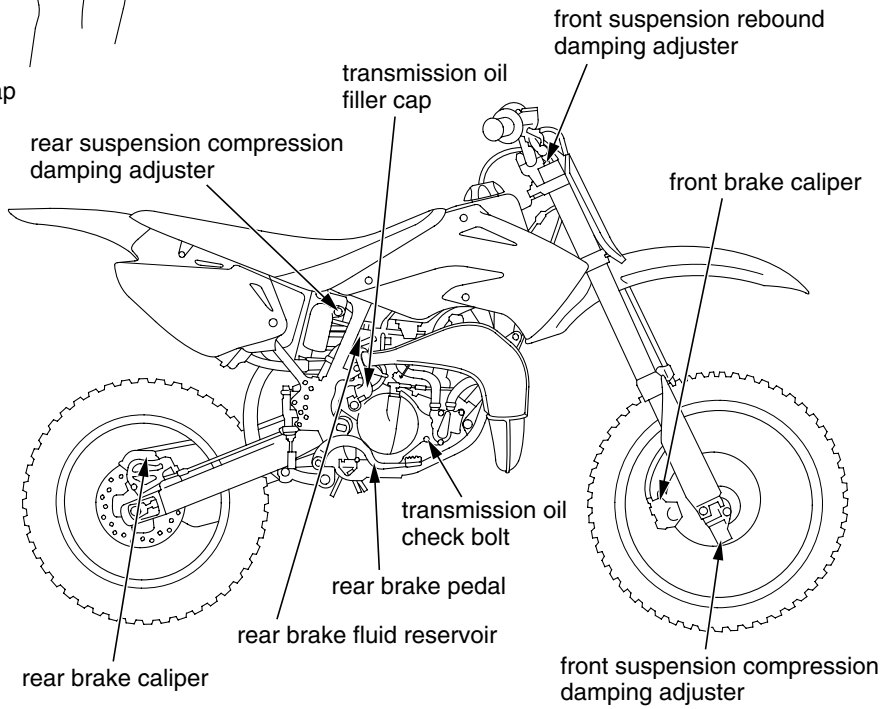

Refer to *Safety Precautions* on page 19.

Removal
1. Remove the seat bolts (1).
2. Slide the seat (2) back.

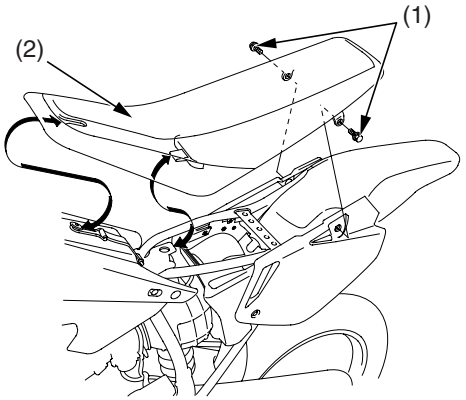

(1) seat bolts
(2) seat

Installation
1. Slide the seat front prong (1) onto the seat bracket (2) and the seat rear prong (3) onto the tab (4) by pushing down and forward on the seat in each of these areas.
2. Install the seat bolts (5) and tighten them to the specified torque:
   19 lbf·ft (26 N·m, 2.7 kgf·m)

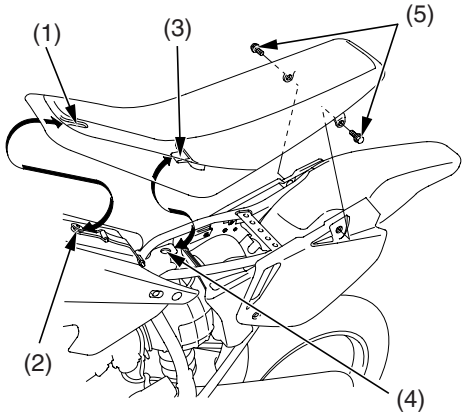

(1) seat front prong
(2) seat bracket
(3) seat rear prong
(4) tab
(5) seat bolts

Fuel Tank Removal

Refer to *Safety Precautions* on page 19.

Removal

1. Turn the fuel valve OFF.
2. Remove the right side shroud bolts (1).
3. Remove the right side shroud (2) while sliding it forward.

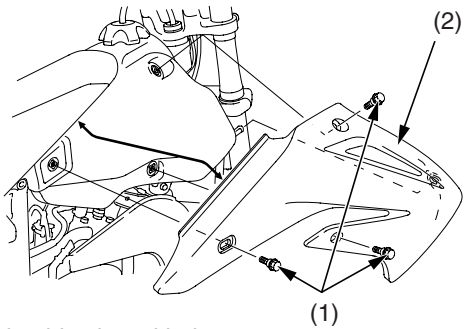

(1) right side shroud bolts
(2) right side shroud

4. Remove the left side shroud bolts (3), collar (4) and left side shroud (5).

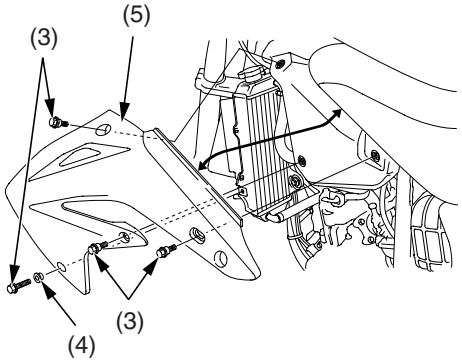

(3) left side shroud bolts
(4) collar
(5) left side shroud

5. Remove the seat (page 29).
6. Pull the breather tube (6) out of steering stem nut.
7. Unhook and remove the fuel tank band (7).
8. Disconnect the fuel line (8) from the fuel valve.
9. Remove the right and left side fuel tank bolts/washers (9) and fuel tank.

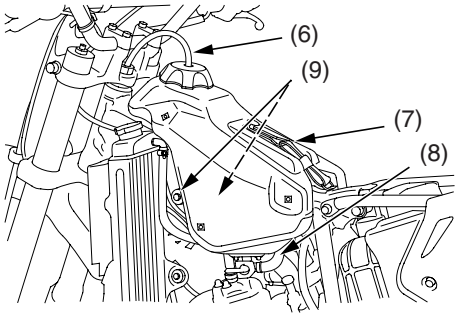

(6) breather tube
(7) fuel tank band
(8) fuel line
(9) right and left side fuel tank bolts/washers

⚠ WARNING

Gasoline is highly flammable and explosive. You can be burned or seriously injured when handling fuel.

- Stop the engine and keep heat, sparks and flame away.
- Handle fuel only outdoors.
- Wipe up spills immediately.

Installation

1. Install the fuel tank on the frame.
2. Tighten the right and left side fuel tank bolts/washers (1).
3. Connect the fuel line (2) to the fuel valve.
4. Hook the fuel tank band (3).
5. Put the breather tube (4) in the steering stem nut.

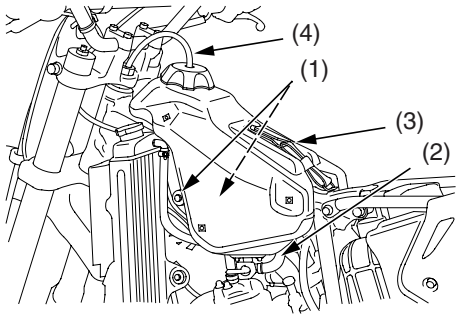

(1) right and left side fuel tank bolts/washers
(2) fuel line
(3) fuel tank band
(4) breather tube

6. Install the seat (page 29).
7. Install the left side shroud (5), collar (6) and left side shroud bolts (7).

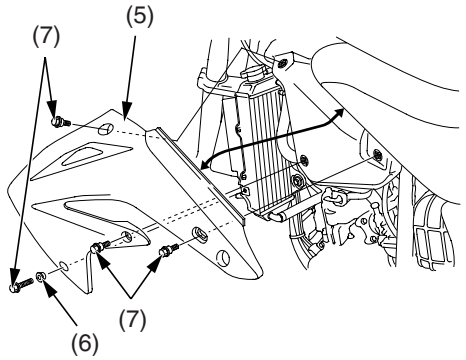

(5) left side shroud
(6) collar
(7) left side shroud bolts

8. Install the right side shroud (8) by aligning the grommet (9) of the shroud and boss (10) of the fuel tank.
9. Tighten the right side shroud bolts (11).

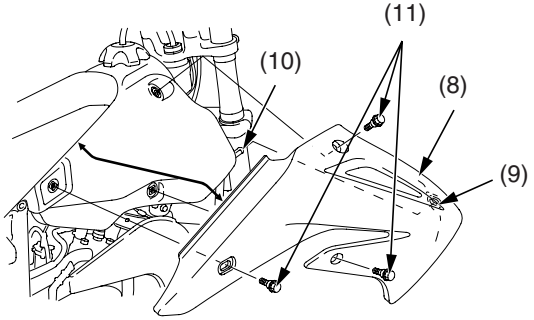

(8) right side shroud
(9) grommet
(10) boss
(11) right side shroud bolts

Subframe Removal

Refer to *Safety Precautions* on page 19.

Removal

1. Remove the seat (page 29).
2. Remove the right side cover (1) by removing the bolt/collar (2).

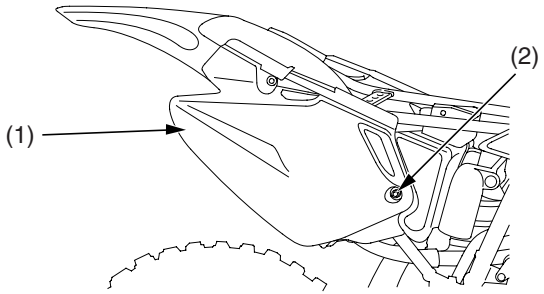

(1) right side cover
(2) bolt/collar

3. Remove the bolt/washer (3) and silencer (4).

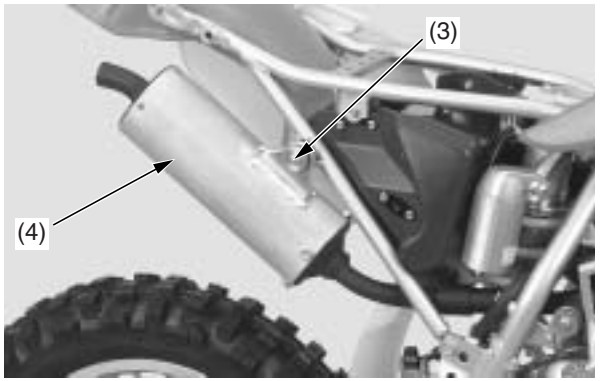

(3) bolt/washer
(4) silencer

4. Loosen the screw (5) on the air cleaner connecting tube clamp (6).

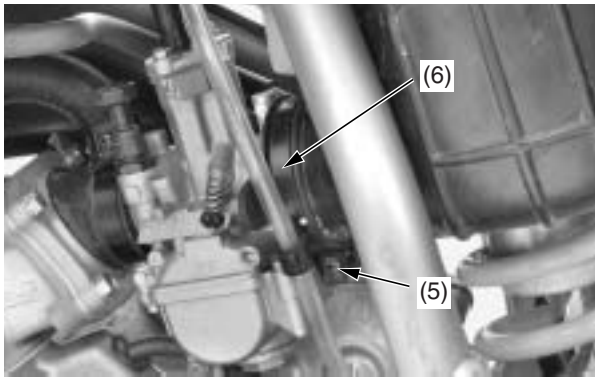

(5) screw
(6) connecting tube clamp

5. Remove the lower subframe mounting bolts (7) and upper subframe mounting bolt (8).
6. Remove the subframe (9) by pulling it straight backward.

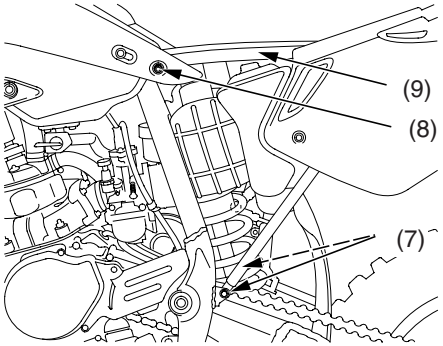

(7) lower subframe mounting bolts
(8) upper subframe mounting bolt
(9) subframe

Installation

1. Loosely attach the upper and lower ends of the subframe to the mainframe while connecting the air cleaner connecting tube to the carburetor.
2. Tighten the screw (1) on the connecting tube clamp (2).

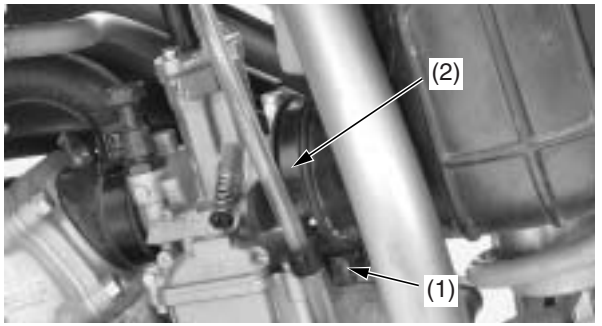

(1) screw
(2) connecting tube clamp

3. Align the subframe (3) with the rear wheel and install the upper subframe mounting bolt (4) and lower subframe mounting bolts (5).
4. Tighten the upper subframe mounting bolt to the specified torque:
   16 lbf·ft (22 N·m, 2.2 kgf·m)
5. Tighten the lower subframe mounting bolts to the specified torque:
   16 lbf·ft (22 N·m, 2.2 kgf·m)

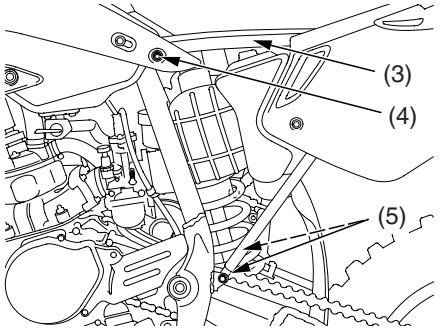

(3) subframe
(4) upper subframe mounting bolt
(5) lower subframe mounting bolts

6. Connect the silencer (6) to the expansion chamber with the sealing rubber.

Install the rubber seal (7) with its "FR" mark (8) facing foward.

7. Install and tighten the bolt/washer (9).

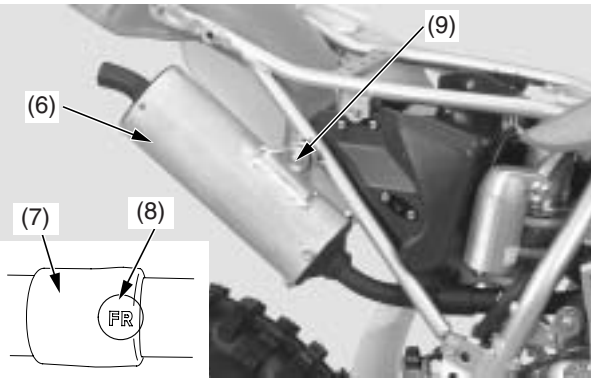

(6) silencer
(7) rubber seal
(8) "FR" mark
(9) bolt/washer

8. Install the right side cover (10) and bolt/collar (11).

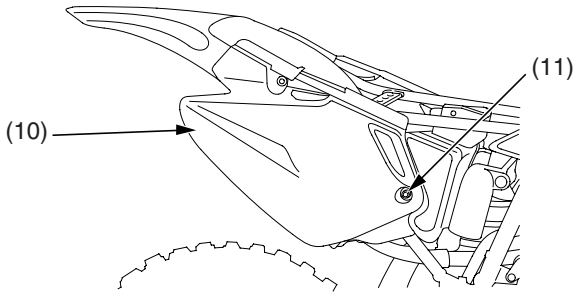

(10) right side cover
(11) bolt/collar

9. Install the seat (page 29).

Fuel System

Refer to *Safety Precautions* on page 19.

Fuel Recommendation

Type	Unleaded
Pump Octane Number	91 (or higher)

We recommend that you use unleaded fuel because it produces fewer engine deposits and extends the life of exhaust system components.

Your engine is designed to use any gasoline that has a pump octane number of 91 or higher. Gasoline pumps at service stations normally display the pump octane number. For information on the use of oxygenated fuels, see page 112.

Use of lower octane gasoline can cause persistent "pinging" or "spark knock" (a louder rapping noise) which, if severe, can lead to engine damage. (Light pinging experienced while operating under a heavy load, such as climbing a hill, is no cause for concern.)

If pinging or spark knock occurs at a steady engine speed under normal load, change brands of gasoline. If pinging or spark knock persists, consult your Honda dealer.

Never use stale or contaminated gasoline. Avoid getting dirt, dust, or water in the fuel tank.

Premix gasoline and oil in a ratio of 32:1. Prepare the fuel mixture in a clean container, and shake until thoroughly mixed before filling the fuel tank.

USE Pro Honda HP2 2-stroke Oil (32:1) OR AN EQUIVALENT.

NOTICE

Too much oil will cause excessive smoking and spark plug fouling. Too little oil will cause engine damage or premature wear.

Vegetable oils separate from gasoline more easily than mineral oils, especially in cold weather. It is advisable to use mineral oil when ambient temperatures below 32°F (0°C) are expected.

If the gasoline-oil mixture is left standing in a container for a long period of time, lubricity will deteriorate. Use the mixture within 24 hours-or the time period recommended by the oil manufacturer.

Once an oil container is opened, the oil must be used within one month, since oxidation may occur.

32:1 FUEL OIL MIXING CHART

Fuel 32		Oil 1	
Gallons	Liters	Ounces	cm^3
0.5	1.89	2.0	59
1.0	3.78	4.0	118
1.5	5.67	6.0	177
2.0	7.57	8.0	237
2.5	9.46	10.0	296
3.0	11.35	12.0	355
3.5	13.24	14.0	414
4.0	15.14	16.0	473
4.5	17.03	18.0	532
5.0	18.92	20.0	591
5.5	20.81	22.0	651
6.0	22.71	24.0	710

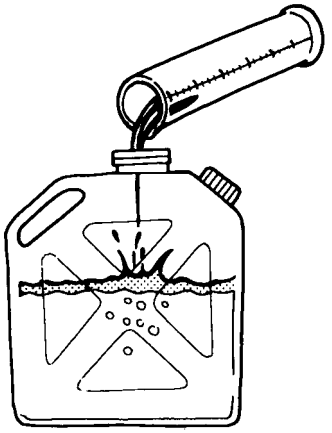

Refueling Procedure

Fuel Tank Capacity: 1.35 US gal (5.1 ℓ)

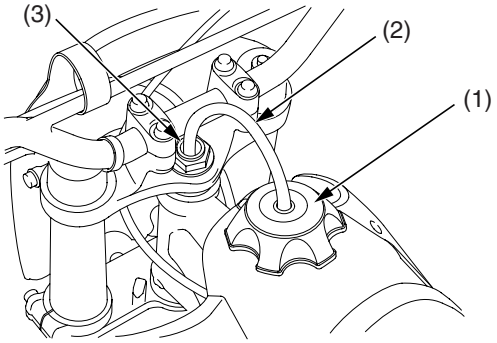

(1) fuel fill cap
(2) breather tube
(3) steering stem nut

1. To open the fuel fill cap (1), pull the breather tube (2) out of the steering stem nut (3). Turn the fuel fill cap counterclockwise and remove it.
2. Add fuel until the level reaches the bottom of the filler neck. Avoid overfilling the tank. There should be no fuel in the filler neck.
3. Close the fuel fill cap and insert the breather tube to the steering stem nut.

⚠ WARNING

Gasoline is highly flammable and explosive. You can be burned or seriously injured when handling fuel.

- Stop the engine and keep heat, sparks and flame away.
- Handle fuel only outdoors.
- Wipe up spills immediately.

Fuel Line

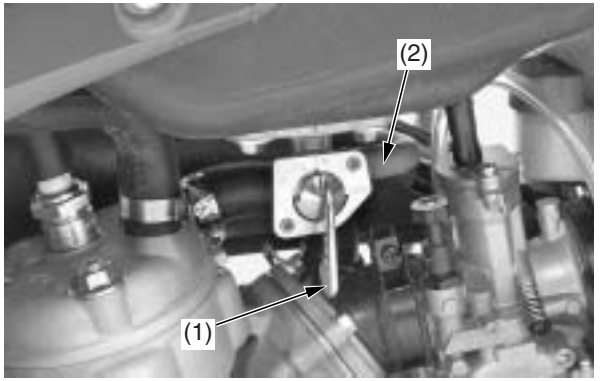

(1) fuel valve
(2) fuel line

1. Check the fuel valve (1) and fuel filter for contamination.
2. Check for leaks.
3. Check the fuel line (2) for cracks, deterioration, damage, or leakage. Replace the fuel line, if necessary.
4. Check for interference between the frame and tank and adjust if necessary.

Fuel Filter

The fuel filter is included in the fuel valve mounted on the bottom left side of the fuel tank. Dirt accumulated in the filter will restrict the flow of the fuel to the carburetor.

To service the fuel filter:

1. Drain the fuel from the fuel tank into an approved gasoline container. Disconnect the fuel line.
2. Remove the fuel valve (1) by removing the bolt (2). Wash the fuel filter (3) in high flash-point cleaning solvent.

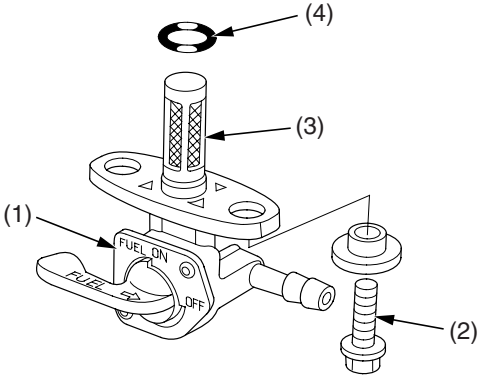

(1) fuel valve
(2) bolt
(3) fuel filter
(4) O-ring

3. Reassemble the fuel valve in the reverse order of removal. Make sure the O-ring (4) is in place. Install the fuel valve in the fuel tank. Refill the fuel tank.
   Attach the fuel line and turn the fuel valve to ON; check for leaks.

Transmission Oil

Refer to *Safety Precautions* on page 19.

Using the proper oil, and regularly checking, adding, and changing oil will help extend the service life of the transmission and clutch. Even the best oil wears out. Changing oil helps get rid of dirt and deposits. Operating the engine with old or dirty oil can damage your engine. Running the engine with insufficient oil can cause serious damage to the transmission.

Oil Recommendation

API classification (4-stroke engine oil only)	SG or higher except oils labeled as energy conserving on the circular API service label
Viscosity (weight)	10W–30 (4-stroke engine oil)
JASO T903 standard (4-stroke engine oil only)	MA
others	without friction modifiers as molybdenum additives
suggested oil*	Pro Honda GN4 4-stroke engine oil or an equivalent*

* Suggested 4-stroke engine oils are equal performance to SJ oils that are not labeled as energy conserving on the circular API service label.

- Your CR does not need oil additives. Use the recommended oil.
- Do not use oils with graphite or molybdenum additives. They may adversely affect clutch operation.
- Do not use API SH or higher 4-stroke engine oils displaying a circular API "energy conserving" service label on the container. They may affect lubrication and clutch performance.

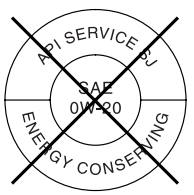

NOT RECOMMENDED

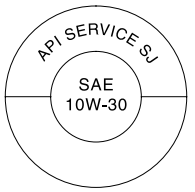

OK

Other viscosities shown in the following chart may be used when the average temperature in your riding area is within the indicated range.

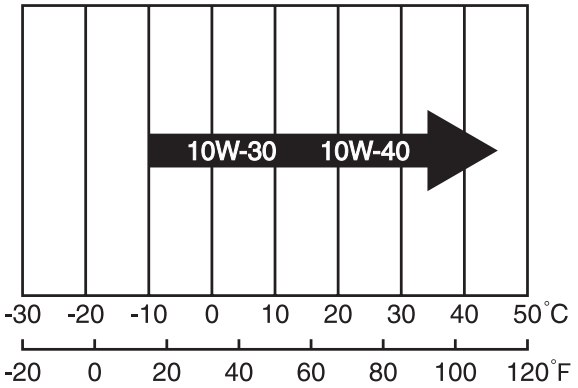

JASO T 903 standard
The JASO T 903 standard is an index for engine oils for 4-stroke motorcycle engines.
There are two classes: MA and MB.
Oil conforming to the standard is labeled on the oil container.
For example, the following label shows the MA classfication.

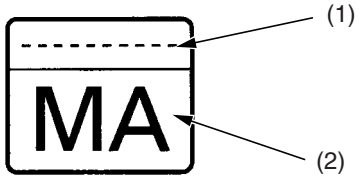

PRODUCT MEETING JASO T 903
COMPANY GUARANTEEING THIS MA PERFORMANCE:

(1) code number of the sales company of the oil
(2) oil classification

Checking & Adding Oil

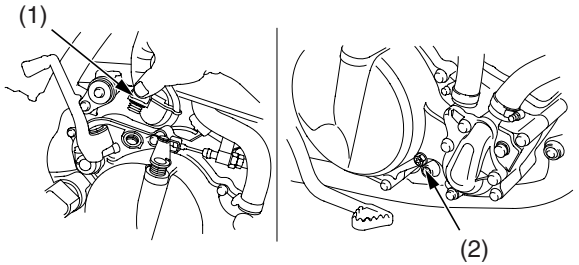

(1) oil filler cap (2) oil check bolt

1. Run the engine for three minutes, then shut it off.
2. Wait three minutes after shutting off the engine to allow the oil to properly distribute itself in the clutch and transmission.
3. Support the CR in an upright position on a level surface.
4. Remove the oil filler cap (1) and oil check bolt (2) from the right crankcase cover. A small amount of oil should flow out of the check bolt hole. Allow any excess oil to flow out of the check bolt hole.
5. If no oil flows out of the check bolt hole, add oil slowly through the oil filler hole until oil starts to flow out of the check bolt hole. Install the oil check bolt and filler cap.
6. Repeat steps 1 - 4.
7. After inspecting the oil level or adding oil, tighten the oil check bolt and filler cap securely and oil check bolt to the specified torque:
   6.6 lbf·ft (9 N·m, 0.9 kgf·m)

Replacing Transmission Oil

1. Run the engine for three minutes, then shut it off.
2. Support the CR in an upright position on a level surface.
3. Remove the oil filler cap from the right crankcase cover.
4. Place an oil drain pan under the engine to catch the oil. Then remove the oil drain bolt (1).
5. Pour the drained oil into a suitable container and dispose of it in an approved manner (page 102).

NOTICE

Improper disposal of drained fluids is harmful to the environment.

6. After the oil has drained completely, install the drain bolt with a new sealing washer and tighten it to the specified torque:
   18 lbf·ft (25 N·m, 2.5 kgf·m)
7. Add the recommended oil:
   0.58 US qt (0.55 ℓ) at oil change
8. Check the oil level by following the steps in *Checking & Adding Oil*.

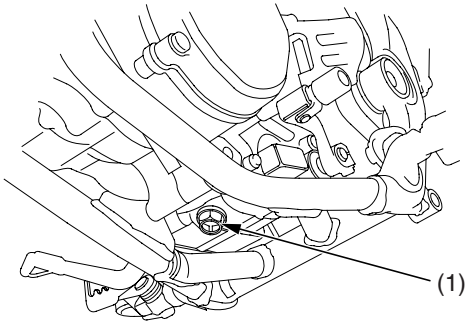

(1) oil drain bolt

Coolant

Your CR's liquid cooling system dissipates engine heat through the coolant jacket that surrounds the cylinder and cylinder head.

Maintaining the coolant will allow the cooling system to work properly and prevent freezing, overheating, and corrosion.

Coolant Recommendation

Use Pro Honda HP coolant or an equivalent high quality ethylene glycol antifreeze containing corrosion protection inhibitors specifically recommended for use in aluminum engines. Check the antifreeze container label.

Use only distilled water as a part of the coolant solution. Water that is high in mineral content or salt may be harmful to the aluminum engine.

NOTICE

Using coolant with silicate inhibitors may cause premature wear of radiator pump seals or blockage of radiator passages. Using tap water may cause engine damage.

The factory provides a 50/50 solution of antifreeze and water in this motorcycle. This coolant solution is recommended for most operating temperatures and provides good corrosion protection.

Decreasing the concentration of antifreeze to less than 40% will not provide proper corrosion protection.

Increasing the concentration of antifreeze is not recommended because it decreases cooling system performance. Higher concentrations of antifreeze (up to 60%) should only be used to provide additional protection against freezing. Check the cooling system frequently during freezing weather.

Checking & Adding Coolant

Refer to *Safety Precautions on page* 19.

1. With the engine cold, remove the radiator cap (1) and check coolant level. The coolant level is correct when it is at the bottom of the radiator filler neck (2).

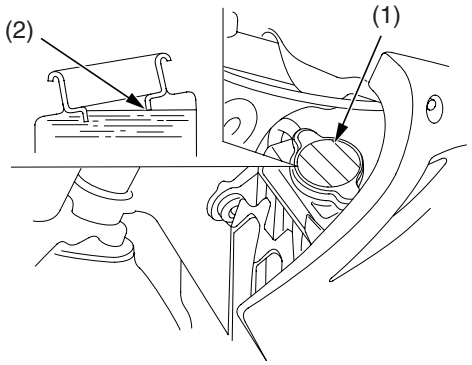

(1) radiator cap (2) radiator filler neck

⚠ WARNING

Removing the radiator cap while the engine is hot can allow the coolant to spray out, seriously scalding you.

Always let the engine and radiator cool down before removing the radiator cap.

2. Add coolant up to the filler neck if the level is low.
   Inspect the coolant level before each outing. A coolant loss of 0.7 - 2.0 US oz (20 - 60 cm^3) through the overflow tube is normal. If coolant loss is more than this, inspect the cooling system.
   Capacity:
   0.45 US qt (0.43 ℓ) at disassembly
   0.45 US qt (0.43 ℓ) at coolant change
3. Install the radiator cap securely.

NOTICE

If the radiator cap is not installed properly, it will cause excessive coolant loss and may result in overheating and engine damage.

Cooling System Inspection

1. Check the cooling system for leaks (see the Honda Service Manual for troubleshooting of leaks).
2. Check water hoses (1) for cracks, deterioration, and clamp bands for looseness.
3. Check the radiator mount for looseness.
4. Make sure the overflow tube (2) is connected and not clogged.
5. Check the radiator fins for clogging.
6. Check the water leakage check hole (3) below the water pump cover (4) for leakage. Make sure the hole remains open. If water leaks through the check hole, the water pump seal is damaged. If oil leaks through the check hole, the transmission oil seal is damaged. See the Honda Service Manual or consult your Honda dealer for replacing the water pump seal or the transmission oil seal. Both seals should be replaced at the same time.

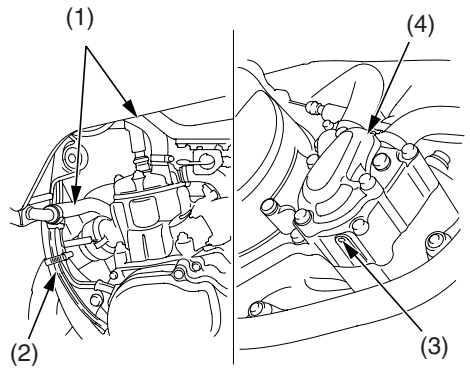

(1) water hoses
(2) overflow tube
(3) water leakage check hole
(4) water pump cover

Coolant Replacement

Refer to *Safety Precautions* on page 19.

Coolant should be replaced by your Honda dealer, unless you have the proper tools and service data and are mechanically qualified. Refer to the official Honda Service Manual (page 120).

⚠ WARNING

Removing the radiator cap while the engine is hot can allow the coolant to spray out, seriously scalding you.

Always let the engine and radiator cool down before removing the radiator cap.

To properly dispose of drained coolant, refer to *You & the Environment*, page 102.

NOTICE

Improper disposal of drained fluids is harmful to the environment.

Air Cleaner

Refer to *Safety Precautions* on page 19.

The air cleaner uses polyurethane inner and outer pieces which can't be separated.
A dirty air cleaner will reduce engine power.

Proper air cleaner maintenance is very important for off-road vehicles. A dirty, water-soaked, worn-out, or defective air cleaner will allow dirt, dust, mud, and other impurities to pass into the engine.

Service the air cleaner more frequently if you ride in unusually wet or dusty areas. Your Honda dealer can help you determine the correct service interval for your riding conditions.

Your CR's air cleaner has very specific performance requirements. Use a new genuine Honda air cleaner specified for your model or an air cleaner of equal quality.

Proper air cleaner maintenance can prevent premature engine wear or damage, expensive repairs, low engine power, poor gas mileage, and spark plug fouling.

NOTICE

Improper or lack of proper air cleaner maintenance can cause poor performance and premature engine wear.

Cleaning

1. Remove the seat (page 29).
2. Loosen the air cleaner retaining bolt (1).
3. Remove the air cleaner assembly (2).

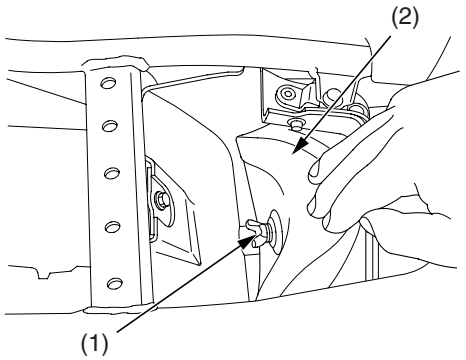

(1) air cleaner retaining bolt
(2) air cleaner assembly

4. Remove the air cleaner (3) from the air cleaner holder (4).

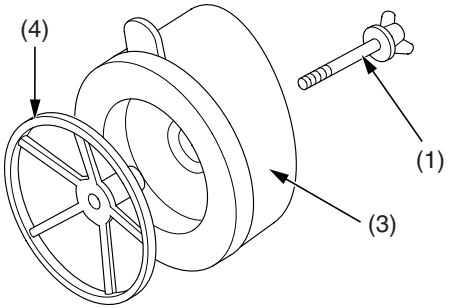

(1) air cleaner retaining bolt
(3) air cleaner
(4) air cleaner holder

5. Wash the air cleaner in clean non-flammable (high flash point) cleaning solvent such as kerosene not gasoline. Then wash it in hot, soapy water, rinse well, and allow to dry thoroughly.
   The air cleaner is made in two pieces : inner and outer, which can't be separated.
6. Inspect for tears or cracks in the foam or seams of the air cleaner. Replace the air cleaner if it is damaged.
7. Clean the inside of the air cleaner housing.
8. Allow the air cleaner to dry thoroughly. After drying, soak the air cleaner in clean Pro Honda Foam Filter Oil or an equivalent air cleaner oil.
   Apply air cleaner oil to the entire surface of the air cleaner and rub it with both hands to saturate the air cleaner with oil. Squeeze out excess oil.

9. Apply a thin coat of Pro Honda White Lithium Grease, or an equivalent, to the sealing surface.
10. Assemble the air cleaner and holder and put the air cleaner retaining bolt through the assembly.
11. Install the assembly into the air cleaner housing with the tab (5) facing up and tighten the bolt securely.

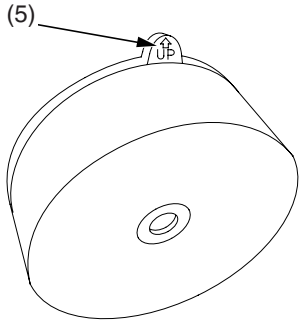

(5) tab

NOTICE

Improper installation of the air cleaner assembly may allow dirt and dust to enter the engine and cause rapid wear of the piston rings and cylinder.

12. Reinstall the seat (page 29), making sure it is securely attached.

Throttle

Refer to *Safety Precautions* on page 19.

Throttle Freeplay

RIGHT SIDE

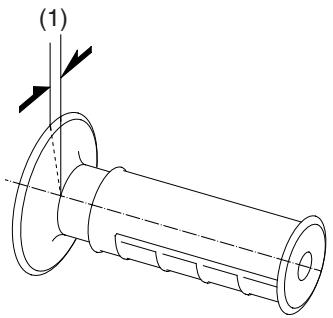

(1) throttle freeplay

Inspection
Check freeplay (1).
Freeplay: 1/8 - 1/4 in (3 - 6 mm)
If necessary, adjust to the specified range.

Upper Adjustment
Minor adjustments are generally made with the upper adjuster.

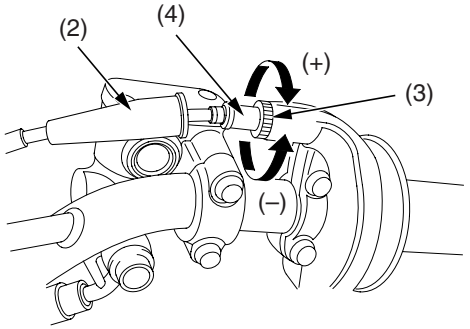

(2) rubber dust cover
(3) upper lock nut
(4) upper adjuster

(+)increase
(–)decrease

1. Pull the rubber dust cover (2) back.
2. Loosen the upper lock nut (3) on the throttle cable mechanism.
3. Turn the upper adjuster (4).
   Turning the adjuster in direction (–) will decrease freeplay and turning it in direction (+) will increase freeplay.
4. Tighten the upper lock nut. Return the rubber dust cover to its normal position.
5. After adjustment, check for smooth rotation of the throttle grip from fully closed to fully open in all steering positions.
   If the adjuster is threaded out near its limit or the correct freeplay cannot be reached, turn the adjuster all the way in and back out one turn. Tighten the upper lock nut, install the rubber dust cover and make the adjustment with the lower adjuster.

Lower Adjustment
The lower adjuster is used for major freeplay adjustment, such as after replacing the throttle cables or removing the carburetor. It is also used if you can not get the proper adjustment with the upper adjuster.

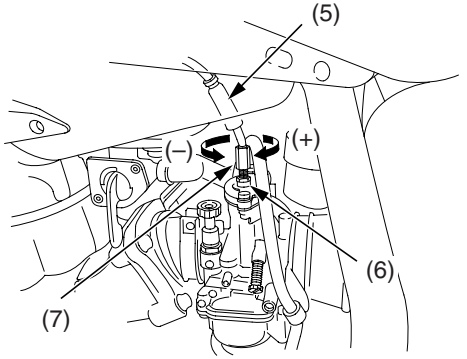

(5) rubber cap
(6) lock nut
(7) adjuster

(+) increase
(–) decrease

1. Pull up the rubber cap (5) on the carburetor cap and loosen the lock nut (6).
2. Turn the adjuster (7) in direction (–) to decrease freeplay, and in direction (+) to increase freeplay.
3. Tighten the lock nut.
4. Reinstall the rubber cap securely after adjustment.
5. Operate the throttle grip to ensure that it functions smoothly and returns completely.

If you can't get the freeplay within the specified range, contact your Honda dealer.

Throttle Inspection

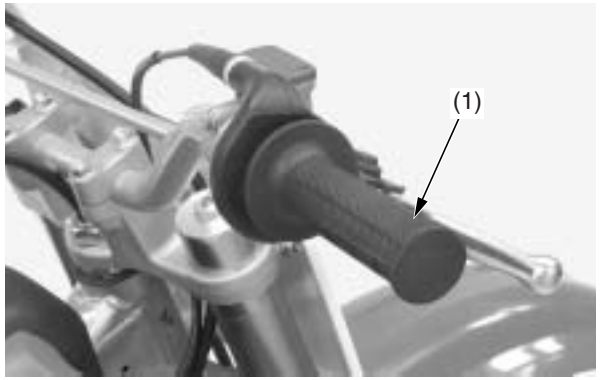

(1) throttle

1. Check that the throttle assembly is positioned properly and the securing bolts are tight.
2. Check for smooth rotation of the throttle (1) from fully open to fully closed in all steering positions. If there is a problem, see your Honda dealer.
3. Inspect the condition of the throttle cables from the throttle grip down to the carburetor. If the cable is kinked or chafed, have it replaced.
4. Check the cables for tension or stress in all steering positions.
5. Lubricate the cables with a commercially-available cable lubricant to prevent premature rust and corrosion.

Refer to *Safety Precautions* on page 19.

Clutch Freeplay

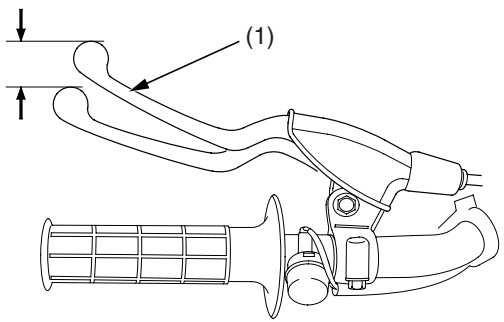

(1) clutch lever

Inspection
Check freeplay.
Freeplay: 3/8 - 13/16 in (10 - 20 mm)

If necessary, adjust to the specified range. Improper freeplay adjustment can cause premature clutch wear.

Cable End Adjustment
Minor adjustments are generally made with the cable end adjuster.

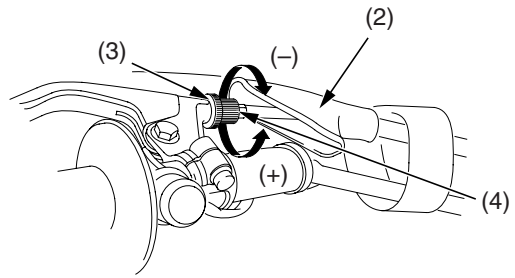

(2) dust cover
(3) lock nut
(4) cable end adjuster
(+) increase
(–) decrease

1. Pull the dust cover (2) back.
2. Loosen the lock nut (3) and turn the cable end adjuster (4). Turning the adjuster in direction (–) will decrease freeplay and turning in the direction (+) will increase freeplay.
3. After adjustment, tighten the lock nut and install the dust cover.
4. Check the freeplay again.

Lower Adjustment
The lower clutch cable adjuster is used if the upper clutch cable adjuster is threaded out near its limit — or the correct freeplay cannot be obtained.

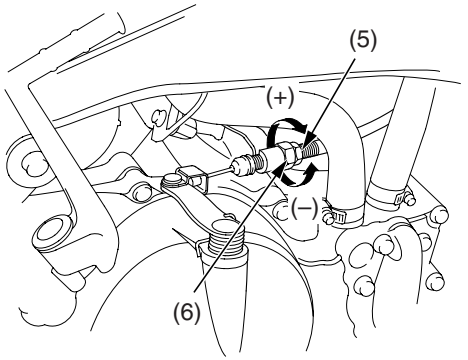

(5) lock nut
(6) lower clutch cable adjuster
(+) increase
(–) decrease

1. Turn the cable end adjuster all the way in (to provide maximum freeplay) and back one turn.
2. Loosen the lock nut (5).
3. Turn the lower clutch cable adjuster (6) to obtain the specified freeplay.
4. Tighten the lock nut. Check the adjustment.

5. Start the engine, pull the clutch lever in, and shift into gear. Make sure the engine does not stall and the motorcycle does not creep. Gradually release the clutch lever and open the throttle. Your CR should move smoothly and accelerate gradually.

If you can't get proper adjustment, or the clutch does not work properly, the cable may be kinked or worn, or the clutch discs may be worn. See your Honda dealer or refer to page 120 the official Honda Service Manual.

Other Inspections & Lubrication

- Check that the clutch lever assembly is positioned properly and the securing bolts are tight.
- Check the clutch cable for kinks or signs of wear. If necessary, have it replaced.
- Lubricate the clutch cable with a commercially-available cable lubricant to prevent premature wear and corrosion.

Clutch Operation

1. Check for smooth clutch lever operation. If necessary, lubricate the clutch lever pivot or clutch cable.
2. Check the clutch cable for deterioration, kinks, or damage.

Spark Plug

Refer to *Safety Precautions* on page 19.

Spark Plug Recommendation

The recommended standard spark plug is satisfactory for most racing conditions.

Standard	BR10EG (NGK)

Use only the recommended type of spark plugs in the recommended heat range.

NOTICE

Using spark plugs with an improper heat range or incorrect reach can cause engine damage. Using a non-resistor spark plug may cause ignition problems.

1. Remove the spark plug cap and spark plug.
2. Measure spark plug gap (1) with a feeler gauge, and adjust by carefully bending the side electrode (2).
   The recommended spark plug gap is:
   0.02 - 0.03 in (0.6 - 0.7 mm)
3. Check the electrode for wear or deposits, the sealing gasket (3) for damage, and the insulator for cracks.

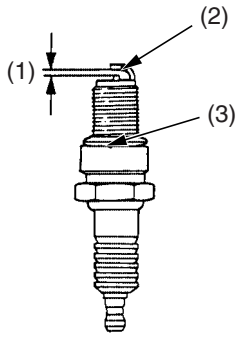

(1) spark plug gap
(2) side electrode
(3) sealing gasket

4. To obtain accurate spark plug readings, accelerate up to speed on a straightaway. Push the engine stop button and disengage the clutch by pulling the lever in.
   If you're using a new plug, ride for at least 10 minutes before taking a plug reading; a brand-new plug will not color initially.
5. Coast to a stop, then remove and inspect the spark plug. The porcelain insulator around the center electrode should appear tan or medium gray.
   If the electrodes appear burnt, or the insulator is white or light gray (lean) or the electrodes and insulator are black or fouled (rich), there is a problem elsewhere (page 94). Check the fuel/oil mixture, carburetor and fuel system, and ignition timing.
6. Tighten the spark plug:
   - If the old plug is good:
     1/8 turn after it seats.
   - If installing a new plug, tighten it twice to prevent loosening:
     a) First, tighten the plug:
        NGK: 3/4 turn after it seats.
     b) Then loosen the plug.
     c) Next, tighten the plug again:
        1/8 turn after it seats.

NOTICE

An improperly tightened spark plug can damage the engine. If a plug is too loose, a piston may be damaged. If a plug is too tight, the threads may be damaged.

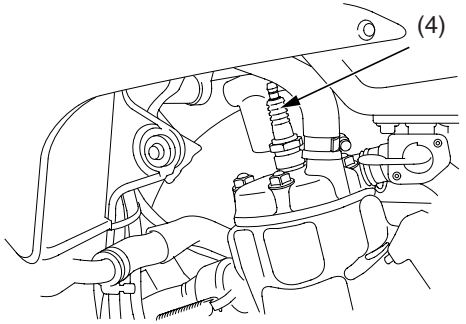

(4) spark plug

7. Reinstall the spark plug cap. Take care to avoid pinching any cables or wires.

Refer to *Safety Precautions* on page 19.

Cylinder Head Removal

Clean the area above the engine before disassembly to prevent dirt falling into the engine.

1. Drain the radiator coolant (page 39).
2. Turn the fuel valve OFF.
3. Remove the seat and fuel tank (pages 29,30).
4. Remove the radiator hoses (1).
5. Disconnect the spark plug cap (2) and remove the spark plug (3).
6. Remove the cylinder head nuts (4) using the technique described below, and remove the cylinder head (5).

   To avoid warping the cylinder head, use a crisscross pattern to loosen each nut about 1/4, then remove the nuts.

7. Remove the cylinder head gasket.

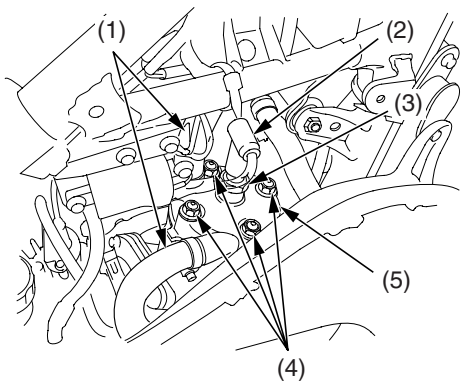

(1) radiator hoses
(2) spark plug cap
(3) spark plug
(4) cylinder head nuts
(5) cylinder head

Cylinder Removal

1. Remove the following:
   – expansion chamber (page 67).
   – cylinder head
   – carburetor (page 92).
2. Disconnect the radiator hoses.
3. Loosen the lower clutch cable adjuster (1).
4. Remove the cylinder mounting nuts (2).
5. Remove the cylinder (3). Do not pry on or strike the cylinder.
6. Place a clean shop towel in the crankcase to keep debris out.
7. Remove the reed valve (4) from the cylinder and replace the gasket.

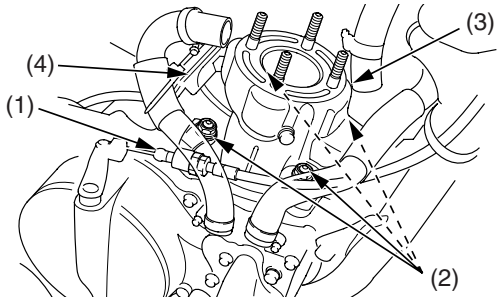

(1) lower clutch cable adjuster
(2) cylinder mounting nuts
(3) cylinder
(4) reed valve

Reed Valve Removal

1. Drain the radiator coolant (page 39).
2. Remove the carburetor (page 92).
3. Remove the radiator hose of the cylinder head.
4. Loosen the carburetor insulator mounting bolts (1) in a criss-cross pattern in 2 or 3 steps.
5. Remove the insulator (2) and reed valve (3) from the cylinder by removing the carburetor insulator mounting bolts and clamp (4).
6. Remove the gasket (5).

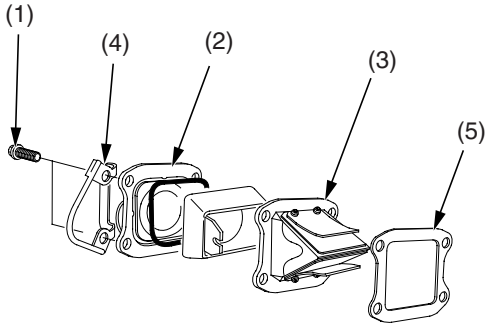

(1) carburetor insulator mounting bolts
(2) insulator
(3) reed valve
(4) clamp
(5) gasket

Piston Removal

1. Place the shop towel in the crankcase.
2. Using a pair of needle-nose pliers, carefully remove the piston pin clip (1). Avoid letting it fall into the crankcase.
3. Support the piston (2) and press the piston pin (3) out of the piston. Remove the piston.

Under racing conditions, the piston and rings should be replaced after 7.5 hours of running. Replace the piston pin and connecting rod small end bearing after 22.5 hours of running.

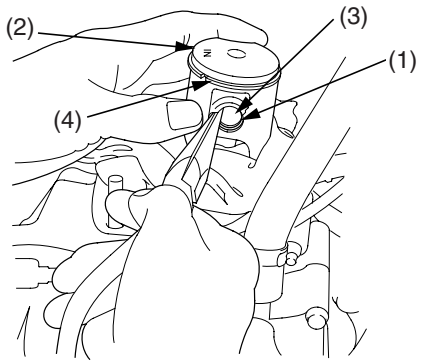

(1) piston pin clip
(2) piston
(3) piston pin
(4) piston ring

4. Spread the piston ring (4) and remove by lifting it up at a point just opposite the gap.

NOTICE

The piston rings may be damaged if their ends are spread too far.

Cylinder Head/Cylinder Decarbonizing

1. Remove the carbon deposits from the cylinder head (1) and piston dome.
   Take care to avoid scratching the cylinder head piston dome, or the head gasket surface.

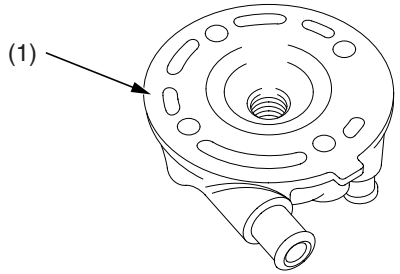

(1) cylinder head

2. Clean carbon deposits from the exhaust port (2) area.

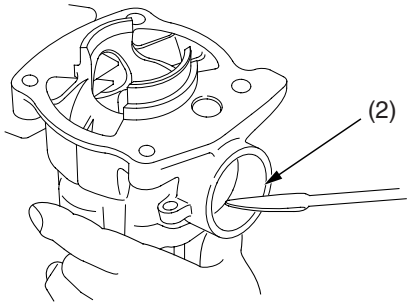

(2) exhaust port

Cylinder/Piston/Piston Pin/Piston Ring Inspection

We recommend you consult the Service Manual or your Honda dealer for correct Service Limit measurements.

Connecting Rod Inspection

1. Remove the shop towel.
2. Install the bearing and piston pin (1) in the connecting rod small end and check for excessive play while holding the connecting rod. If it feels loose, replace the piston pin and small end bearing.

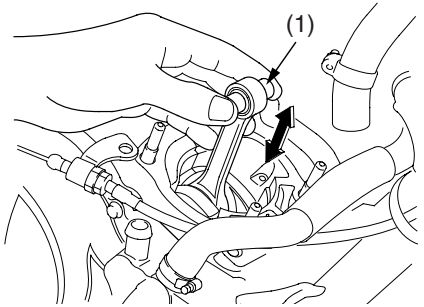

(1) piston pin

3. Place the shop towel back in the crankcase.

Cylinder Head Inspection

Check the cylinder head (1) for warpage in diagonal directions with a straight edge (2) and a feeler gauge (3).
Service Limit: 0.004 in (0.10 mm)

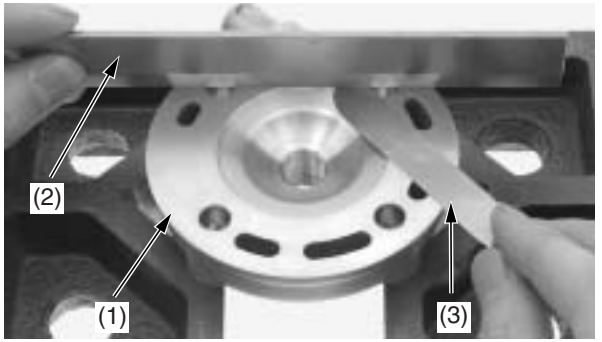

(1) cylinder head
(2) straight edge
(3) feeler gauge

Reed Valve Inspection

1. Check the reed valves (1) for damage or fatigue and replace them if necessary.
2. Replace the reed valves with new ones if the seats are cracked or damaged.

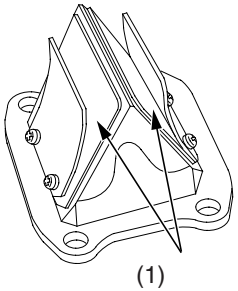

(1) reed valves

Reed Valve Disassembly/Assembly

1. Remove the reed valve mounting screws (1), stopper (2) and reed valve (3).
2. Align the cut-outs (4) between the reed valves and stoppers, then install them onto the body (5).
3. Apply a locking agent to the reed valve mounting screw threads.

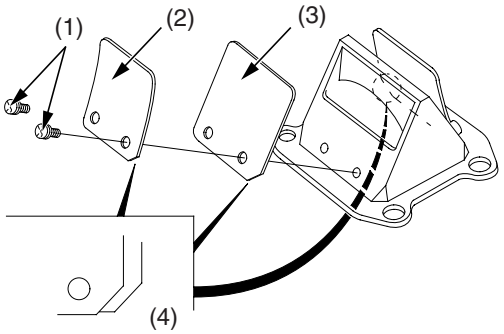

(1) read value mounting screws
(2) stopper
(3) reed valve
(4) cut-outs

4. Install and tighten the mounting screws to the specified torque:
   0.7 lbf·ft (1 N·m, 0.1 kgf·m)
5. Make sure that the clearance between the reed valve (3) and body (5) is less than the 0.008 in (0.2 mm).

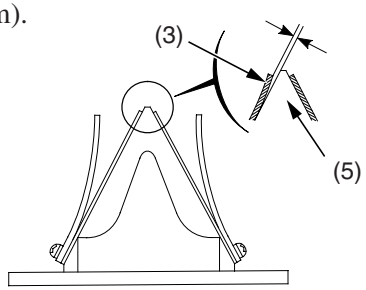

(3) reed valve
(5) body

Piston Installation

1. Clean the piston ring groove.
2. Lubricate the piston ring and piston ring groove with clean 2-stroke oil.
3. Install the piston rings on the piston with the marks facing up.
   Locate the piston ring end gaps on the pins in the ring grooves.
4. Lubricate the small end bearing and piston pin (1) with clean 2-stroke oil.
5. Install the connecting rod small end bearing, piston and piston pin.
   Install the piston with the “IN” mark (2) facing the intake side.
   If the “IN” mark is not found on the piston, install the piston with the hole facing the intake side.
6. Install new piston pin clips (3) (Never reuse old clips.)
   Take care so that the clips do not fall into the crankcase.
   Do not align the piston pin clip end gap with the piston cut-out.

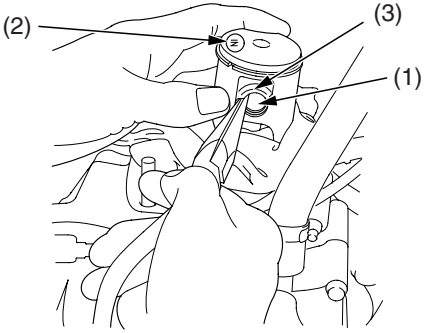

(1) piston pin
(2) “IN” mark
(3) piston pin clip

Reed Valve Installation

1. Replace the insulator o-ring (1) and reed valve gasket (2) with new ones.

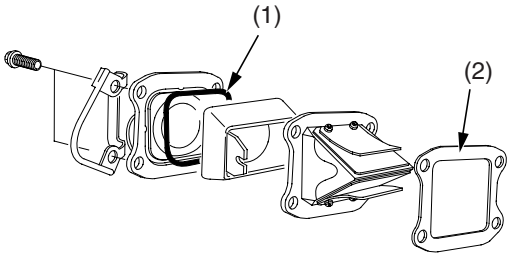

(1) insulator o-ring
(2) reed valve gasket

(cont’d)

2. Install the gasket to the crankcase.
3. Install the reed valve assembly, insulator and clamp to the crankcase.
4. Install the four carburetor insulator mounting bolts (3) and tighten to the specified torque in a crisscross pattern:
   6.6 lbf·ft (9 N·m, 0.9 kgf·m)

After installation, check for secondary air leaks around the reed cage and insulator.

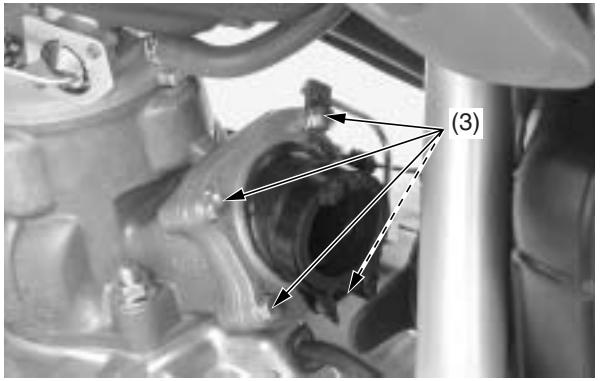

(3) carburetor insulator mounting bolts

5. Install the radiator hose.
6. Install the carburetor (page 92).

Cylinder Installation

1. Clean off any gasket material from the gasket surface of the crankcase, being careful not to let any material fall into the crankcase.
   Be careful not to remove any metal from the gasket surface.
2. Remove the shop towel. Do not let any gasket debris fall into the crankcase.
3. Place the cylinder base gasket (1) and dowel pins (2) on the crankcase.

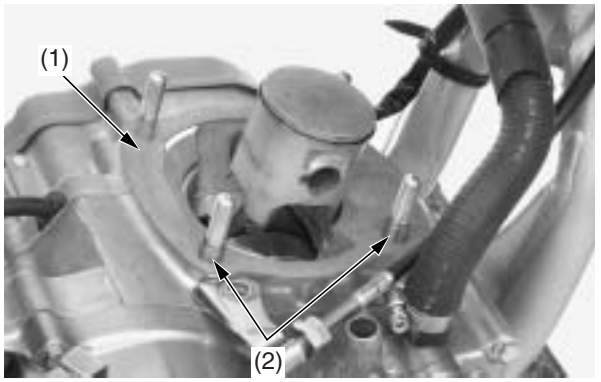

(1) cylinder base gasket (2) dowel pins

4. Lubricate the piston and ring with 2-stroke oil. Align the ring end gap with the piston ring pin in the ring land and slip the cylinder over the piston while compressing the piston ring (3).

NOTICE

Do not rotate the cylinder, since this may cause the piston ring to snag a cylinder port and break.

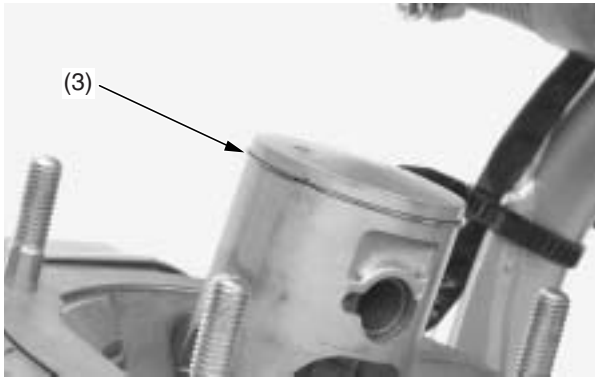

(3) piston ring

Before tightening the cylinder nuts, make sure that there is no clearance between the cylinder and crankcase mating surface.

5. Install the four flange nuts (4) and tighten to the specified torque in a crisscross pattern in 2 or 3 step.
   20 lbf·ft (27 N·m, 2.8 kgf·m)
   Be careful not to overtighten the mounting nuts-this is the most common cause for leaks here.

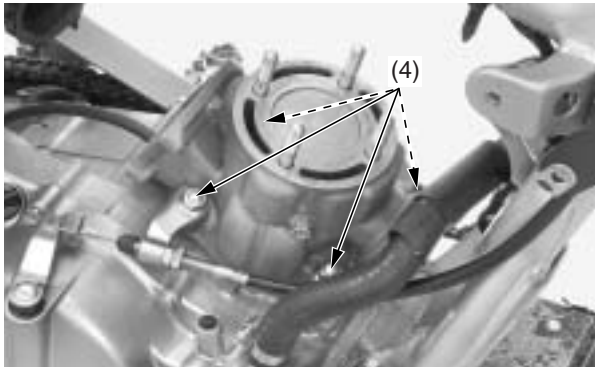

(4) flange nuts

6. Install the following:
   – expansion chamber (page 67)
   – carburetor (page 92)

Cylinder Head Installation

1. Clean the cylinder head mating surface.
2. Install the new cylinder head gasket (1) with its “UP” mark (2) facing up and locating tab (3) facing rearward.

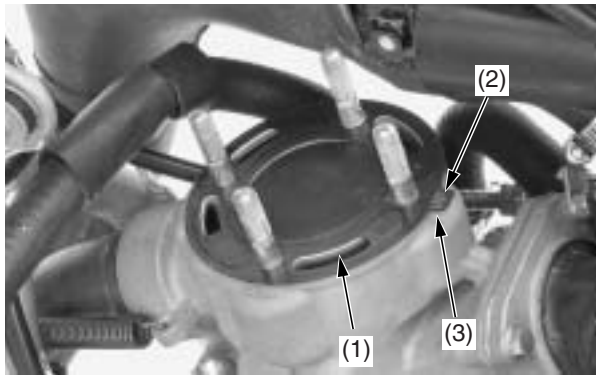

(1) cylinder head gasket (3) tab
(2) “UP” mark

3. Install the cylinder head (4) and tighten the four cylinder head nuts (5) to the specified torque in a crisscross pattern in 2 or 3 steps.
   20 lbf·ft (27 N·m, 2.8 kgf·m)

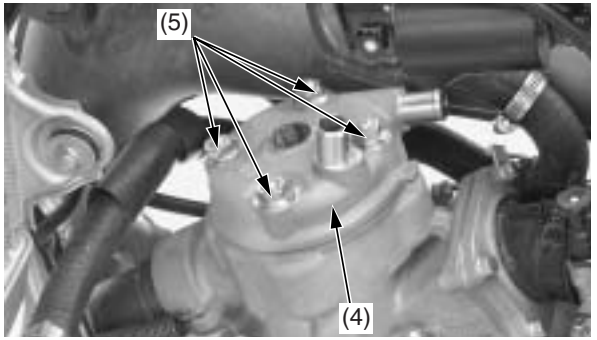

(4) cylinder head (5) cylinder head nuts

4. Install the spark plug and spark plug cap (6).
5. Connect the radiator hoses (7) to the cylinder head.

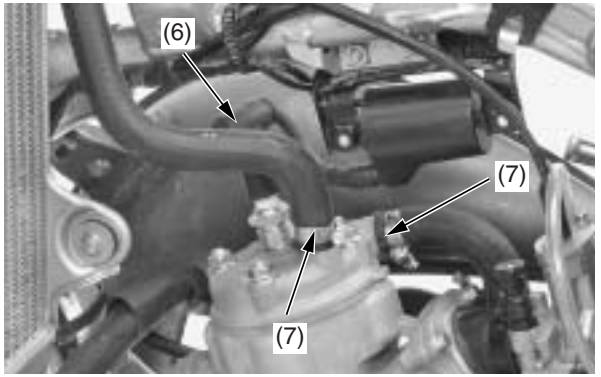

(6) spark plug cap (7) radiator hoses

6. Pour the recommended coolant mixture into the radiator up to the correct level (page 38).
7. Start the engine and check for the following:
   – compression leaks
   – abnormal engine noise
   – carburetor insulator air leaks
   – coolant leaks

Suspension

Refer to *Safety Precautions* on page 19.

Loose, worn, or damaged suspension components may adversely affect the handling and stability of your motorcycle. If any suspension components appear worn or damaged, see your Honda dealer for further inspection. Your dealer is qualified to determine whether or not replacement parts or repairs are needed.

Front Suspension Inspection

- When your CR is new, break it in for approximately one hour to ensure that the suspension has worked in (page 16).
- After break-in, test run your CR with the front suspension at the standard setting before attempting any adjustments.
- For optimum fork performance, we recommend that you disassemble and clean the fork after riding your CR for three hours. See page 72 for fork disassembly.
- Replace the fork oil every three races or 7.5 hours of running. See page 54 for oil level adjustment after changing the fork oil.
- Use Pro Honda HP Fork Oil 5W or an equivalent which contains special additives to assure maximum performance of your CR's front suspension.
- Periodically check and clean all front suspension parts to assure top performance. Check the dust seals for dust, dirt, and foreign materials. Check the oil for any contamination.
- Refer to *Suspension Adjustment Guide lines* (page 85). Make all rebound and compression damping adjustments in one-click increments. (Adjusting two or more clicks at a time may cause you to pass over the best adjustment.) Test ride after each adjustment.
- If you become confused about adjustment settings, return to the standard position and start over.
- If the fork is still too stiff/soft after adjusting compression damping, determine which portion of the travel is still too stiff/soft. This is an important step that will help you solve suspension problems.

1. Make sure that the fork protectors (1) and dust seals (2) are clean and not packed with mud and dirt.
2. Check for signs of oil leakage. Damaged or leaking fork seals should be replaced before your CR is ridden.

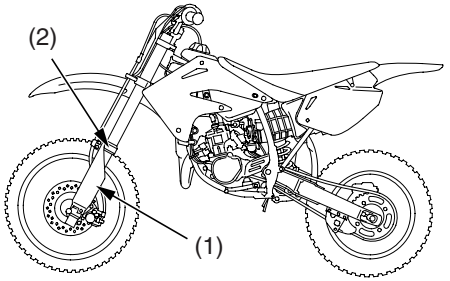

(1) fork protector (2) dust seal

3. Inspect the wear rings (3) for wear or damage. Replace the wear ring if it is 0.06 in (1.5 mm) or flat with the outer tube (4).
   When replacing the wear ring, remove the fork leg (page 72).
   Install the wear ring with its end gap facing rearward.

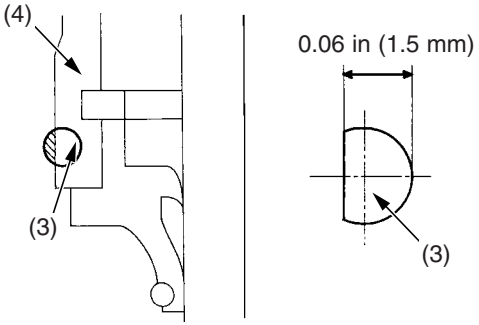

(3) wear ring (4) outer tube

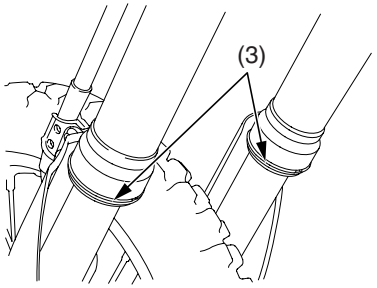

(3) wear rings

4. Make a quick check of fork operation by locking the front brake and pushing down on the handlebar several times.

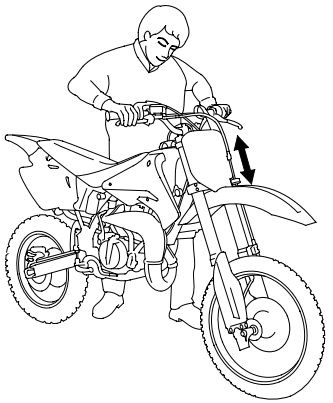

Rear Suspension Inspection

The swingarm is controlled by one hydraulic shock absorber with an aluminum reservoir for oil and nitrogen gas pressure The gas pressure in the reservoir is contained within a rubber bladder.

The shock absorber's spring pre-load and damping adjustments (compression and rebound) should be adjusted for the rider's weight and track conditions (page 84).

Do not attempt to disassemble, service, or dispose of the damper; see your Honda dealer. The instructions found in this owner's manual are limited to adjustments of the shock assembly only.

- When your CR is new, break it in for approximately one hour with the standard suspension settings before attempting to adjust the rear suspension.
- Make all compression and rebound damping adjustments in one-click increments. (Adjusting two or more clicks at a time may cause you to pass over the best adjustment.) Test ride after each adjustment.
- If the rear suspension is too stiff/soft, adjust it by turning both the compression and rebound damping adjusters in one-click increments until the suspension feels approximately "right." (Turning just one adjuster, rather than both, may cause a loss of balance between compression and rebound damping.) After adjusting both adjusters simultaneously, suspension may be fine-tuned by turning either the compression or rebound damping adjuster in one-click increments.
- If you have a problem finding an acceptable adjustment, return to the standard position and begin again.

1. Bounce the rear of the motorcycle up and down and check for smooth suspension action.

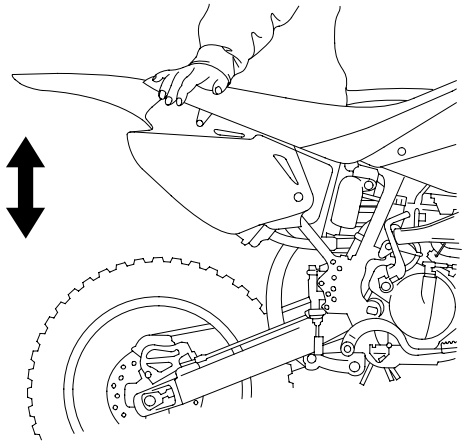

2. Remove the subframe (page 32).
3. Check for a broken or collapsed spring.
4. Check the rear shock absorber (1) for a bent shaft or oil leaks.

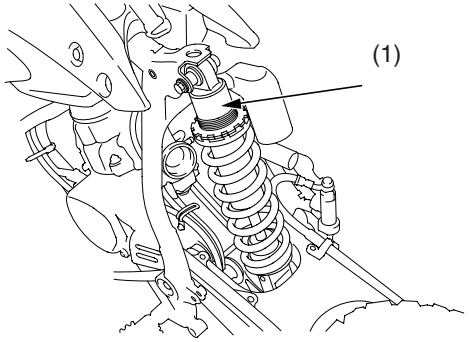

(1) rear shock absorber

5. Push the rear wheel sideways to check for worn or loose swingarm bearings. There should be no movement. If there is, have the bearings replaced by your Honda dealer.

Fork Oil Recommended

viscosity (weight)	5 W
suggested oil	Pro Honda HP Fork Oil or equivalent

Fork Oil Change

1. Remove the fork cap, and fork spring as described in *Front Suspension Oil Level* (page 72).
2. Pour out the fork oil by pumping the fork tube and piston rod (1) eight-ten times with the rod end down as shown.

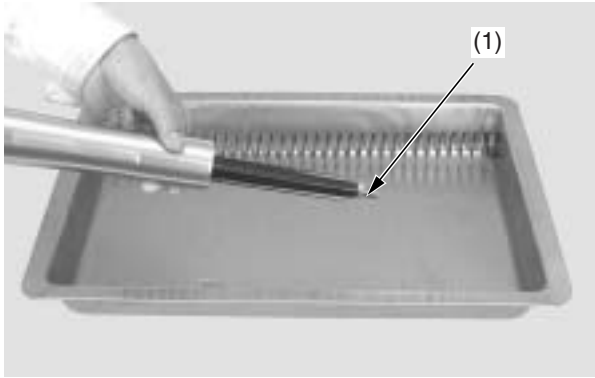

(1) piston rod

3. Pour half of the recommended fork oil into the fork slider and fork tube.

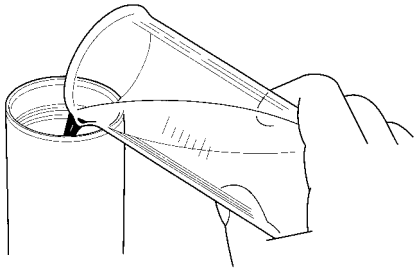

4. Raise the fork tube (2) and cover the top of the tube with your hand. Compress the fork tube fully, then release your hand. Use your other hand to secure the fork tube. Repeat this procedure three times.

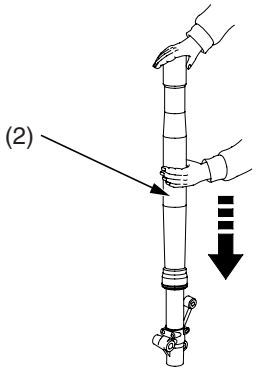

(2) fork tube

5. Pour the remaining fork oil into the piston rod until a little oil flows out of the top of the rod. Pump the piston rod slowly eight-ten times through a stroke of 10 in (25 cm). Gently slide the fork tube down onto the lower end of the slider pipe (3).
   Wait about 5 minutes.

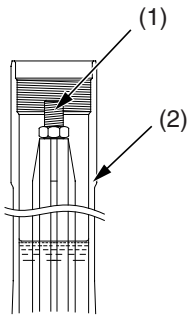

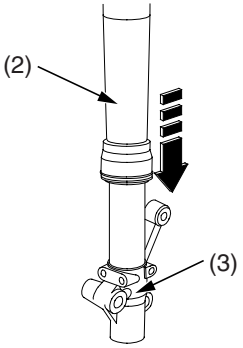

(1) piston rod
(2) fork tube
(3) lower end of the slider pipe

6. With the fork tube held upright, measure the oil level (4) from the top of the tube.

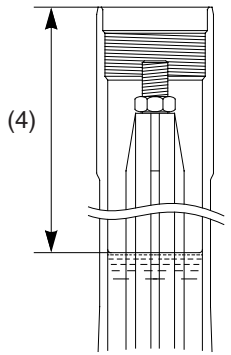

(4) oil level

7. Adjust the oil level by adding or removing the oil with an after market syringe (5).

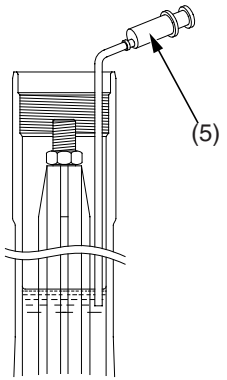

(5) syringe

Fork Oil Level (CR85R)

Standard (0.28 kgf/mm) Fork Spring

1-coil at both ends

(factory products)

Standard oil level [capacity]	4.0 in 101 mm [12.1 US oz (357 cm³)]	
Maximum oil level [capacity]	3.7 in 95 mm [12.2 US oz (361 cm³)]	Slightly stiffer as it nears full compression.
Minimum oil level [capacity]	4.2 in 106 mm [12.0 US oz (354 cm³)]	Slightly softer as it nears full compression.

Optional Softer (0.26 kgf/mm) Fork Spring

2-coils at both ends

Standard oil level [capacity]	3.9 in 99 mm [12.1 US oz (358 cm³)]	
Maximum oil level [capacity]	3.7 in 93 mm [12.2 US oz (362 cm³)]	Slightly stiffer as it nears full compression.
Minimum oil level [capacity]	4.1 in 104 mm [12.0 US oz (355 cm³)]	Slightly softer as it nears full compression.

Optional Stiffer (0.30 kgf/mm) Fork Spring

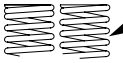

2-coils at one end;
1-coil at other end

Standard oil level [capacity]	3.9 in 99 mm [12.1 US oz (358 cm³)]	
Maximum oil level [capacity]	3.7 in 93 mm [12.2 US oz (362 cm³)]	Slightly stiffer as it nears full compression.
Minimum oil level [capacity]	4.1 in 104 mm [12.0 US oz (355 cm³)]	Slightly softer as it nears full compression.

(cont'd)

Fork Oil Level (CR85RB)

Standard (0.28 kgf/mm) Fork Spring

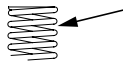

1-coil at both ends

(factory products)

Standard oil level [capacity]	4.0 in 102 mm [12.0 US oz (356 cm³)]	
Maximum oil level [capacity]	3.7 in 95 mm [12.2 US oz (361.4 cm³)]	Slightly stiffer as it nears full compression.
Minimum oil level [capacity]	4.2 in 106 mm [12.0 US oz (353.5 cm³)]	Slightly softer as it nears full compression.

Optional Softer (0.26 kgf/mm) Fork Spring

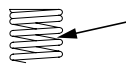

2-coils at both ends

Standard oil level [capacity]	3.8 in 96 mm [12.2 US oz (360.4 cm³)]	
Maximum oil level [capacity]	3.6 in 92 mm [12.3 US oz (362.8 cm³)]	Slightly stiffer as it nears full compression.
Minimum oil level [capacity]	3.9 in 100 mm [12.1 US oz (358.5 cm³)]	Slightly softer as it nears full compression.

Optional Stiffer (0.30 kgf/mm) Fork Spring

2-coils at one end;
1-coil at other end

Standard oil level [capacity]	4.1 in 105 mm [12.0 US oz (354.2 cm³)]	
Maximum oil level [capacity]	4.0 in 102 mm [12.1 US oz (356.6 cm³)]	Slightly stiffer as it nears full compression.
Minimum oil level [capacity]	4.3 in 110 mm [11.9 US oz (351.5 cm³)]	Slightly softer as it nears full compression.

Be sure to check the oil level. Some oil will be left in the fork tube when the oil is drained and causes the oil level to be raised slightly.
Be sure the oil level is the same in both fork legs. If a syringe is not available, first set the oil level somewhat lower than normal, then add small amounts of oil until the correct level is obtained, measuring the level each time oil is added.

8. Install the fork spring, spring seat.

Refer to *Safety Precautions* on page 19.

Both the front and rear brakes are the hydraulic disc type. As the brake pads wear, the brake fluid level will drop. A leak in the system will also cause the level to drop.

Frequently inspect the system to ensure there are no fluid leaks. Periodically inspect the brake fluid level and the brake pads for wear.

If the front brake lever or rear brake pedal freeplay does not feel within the normal range while riding, check the brake pads. If they are not worn beyond the recommended limit (page 60), there is probably air in the brake system. Refer to the Honda Service Manual or see your Honda dealer to have the air bled from the system.

Front Brake Lever Adjustment

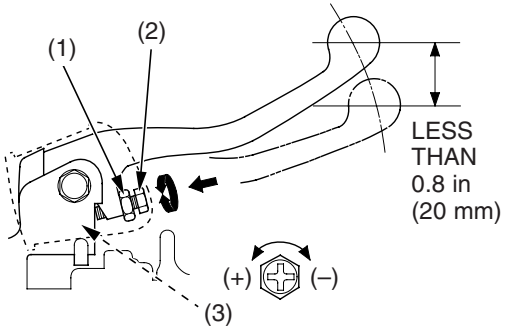

(1) lock nut
(2) adjuster
(3) piston

(+) increase
(–) decrease

1. Loosen the lock nut (1).
2. To position the brake lever farther away from the handgrip, turn the adjuster (2) clockwise. To position the brake lever closer to the handgrip, turn the adjuster counterclockwise.
3. Tighten the lock nut.
4. Apply the brake, release it, then spin the wheel and check that it rotates freely. Repeat this procedure several times.
5. Check freeplay by pulling in slowly on the front brake lever until the brake starts to engage.
   Freeplay: 3/8 - 13/16 in (10 - 20 mm)
6. Apply grease to the contacting faces of the adjuster and piston (3).

Rear Brake Pedal Height

The brake pedal height should be approximately level with the right footpeg.

1. Loosen the lock nut (1) and turn the adjusting bolt (2) in direction (+) to raise the pedal (3) or in direction (–) to lower it.
2. Tighten the lock nut at the desired pedal height.

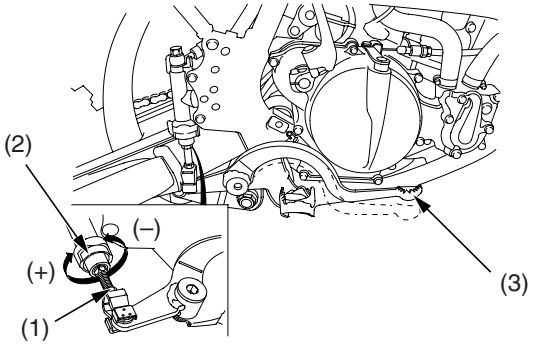

(1) lock nut
(2) adjusting bolt
(3) rear brake pedal

(+) raises the pedal height
(–) lowers the pedal height

Fluid Level Inspection

Front Brake Fluid Level Check

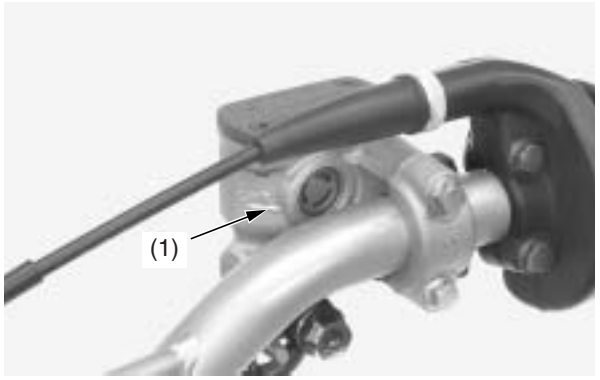

(1) LWR (lower) level mark

With the motorcycle in an upright position, check the fluid level.
It should be above the LWR (lower) level mark (1). If the level is at or below the LWR level mark, check the brake pads for wear (page 60). Worn brake pads should be replaced. If the pads are not worn, have your brake system inspected for leaks.
If the brake lever freeplay exceeds 0.8 in (20 mm), there is probably air in the brake system and it must be bled. Refer to the Honda Service Manual or see your Honda motorcycle dealer for brake bleeding.

Rear Brake Fluid Level Check

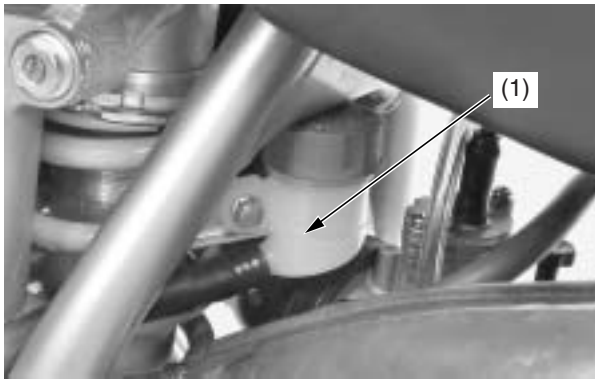

(1) LOWER level mark

With the motorcycle in an upright position, check the fluid level.
It should be above the LOWER level mark (1). If the level is at or below the LOWER level mark, check the brake pads for wear (page 60).
Worn brake pads should be replaced. If the pads are not worn, have your brake system inspected for leaks.
If the brake pedal freeplay exceeds 1.2 in (30 mm), there is probably air in the brake system and it must be bled. Refer to the Honda Service Manual or see your Honda motorcycle dealer for brake bleeding.

Adding Front Brake Fluid

The recommended brake fluid is Pro Honda DOT 4 brake fluid from a sealed container, or an equivalent.
When adding brake fluid be sure the reservoir is horizontal before the cap is removed or brake fluid may spill out.

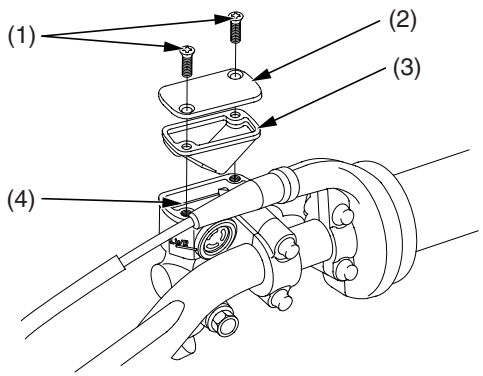

(1) screws
(2) reservoir cap
(3) diaphragm
(4) upper level mark

1. Remove the screws (1), reservoir cap (2) and diaphragm (3).
2. Fill the reservoir with DOT 4 brake fluid to the upper level mark (4). Do not overfill.
3. Reinstall the diaphragm and reservoir cap.
4. Tighten the screws to the specified torque:
   1.1 lbf·ft (1.5 N·m, 0.2 kgf·m)

Adding Rear Brake Fluid

The recommended brake fluid is Pro Honda DOT 4 brake fluid from a sealed container, or an equivalent.
When adding brake fluid be sure the reservoir is horizontal before the cap is removed or brake fluid may spill out.

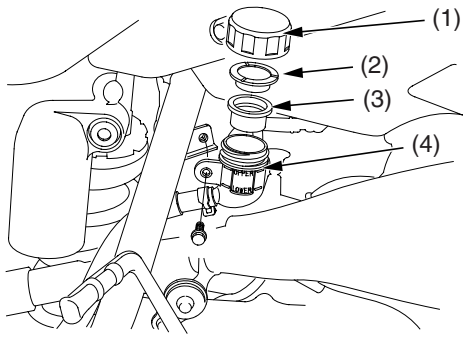

(1) reservoir cap
(2) set plate
(3) diaphragm
(4) UPPER level mark

1. Remove the reservoir cap (1), set plate (2) and diaphragm (3).
2. Fill the reservoir with DOT 4 brake fluid to the UPPER level mark (4). Do not overfill.
3. Reinstall the diaphragm and reservoir cap.
4. Tighten the bolts securely.

Other Inspection

- Make sure there are not fluid leaks.
- Check for deterioration or cracks in the hoses and fittings.

Brake Pad Wear

Brake pad wear depends on the severity of usage and track conditions. (Generally, the pads will wear faster on wet and dirty tracks) Inspect the brake pads at each regular maintenance interval (page 21).

Front Brake Pads
Inspect the brake pads (1) through the front wheel to determine the pad wear. If either pad is worn anywhere to a thickness of 0.04 in (1 mm), both pads must be replaced.

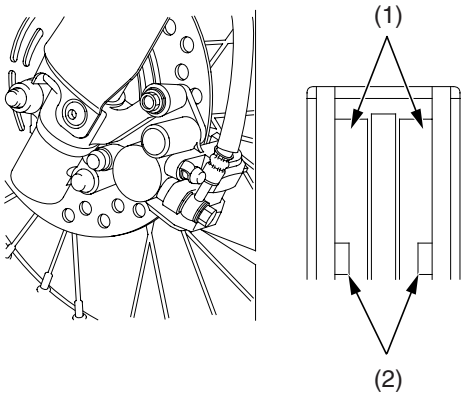

(1) brake pads
(2) wear limits

Rear Brake Pads
Inspect the brake pads (1) from the rear side of the caliper to determine the pad wear. If either pad is worn anywhere to a thickness of 0.04 in (1 mm), both pads must be replaced.

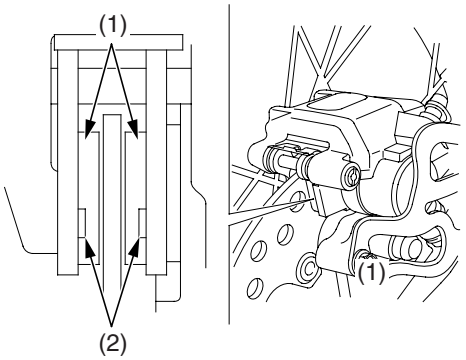

(1) brake pads
(2) wear limits

Other Inspections

Check that the front brake lever and rear brake pedal assemblies are positioned properly and the securing bolts are tight.

Make sure there are no fluid leaks. Check for deterioration or cracks in the hoses and fittings.

Refer to *Safety Precautions* on page 19.

Maintenance of spoke tension and wheel trueness (roundness) is critical to safe motorcycle operation. During the first 100 miles (150 km), spokes will loosen more rapidly due to the initial seating of the parts. Excessively loose spokes may result in instability at high speeds and the possible loss of control. It's also important that the rim locks are secure to prevent tire slippage.

It is not necessary to remove the wheels to perform the recommended service in the Maintenance Schedule. However, information for wheel removal is provided for emergency situations.

Wheel Rims & Spokes

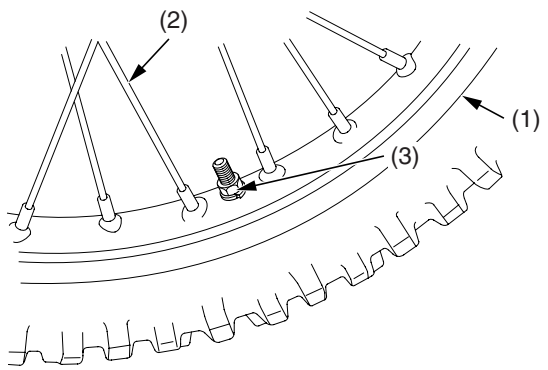

(1) wheel rim
(2) spoke
(3) rim lock

1. Inspect the wheel rims (1) and spokes (2) for damage.
2. Tighten, any loose spokes and rim locks (3) to the specified torque:
   Spoke: 2.7 lbf·ft (3.7 N·m, 0.4 kgf·m)
   Rim Lock: 9 lbf·ft (12.4 N·m, 1.3 kgf·m)
3. Check wheel rim runout. If runout is noticeable, see the Honda Service Manual for inspection instructions.

Axles & Wheel Bearings

See the Honda Service Manual for inspection information:

1. Check the axle for runout.
2. Check the condition of the wheel bearings.

Refer to *Safety Precautions* on page 19.

To safely operate your CR, the tires must be the proper type (off-road) and size, in good condition with adequate tread, and correctly inflated.

⚠ WARNING

Using tires that are excessively worn or improperly inflated can cause a crash in which you can be seriously hurt or killed.

Follow all instructions in this owner's manual regarding tire inflation and maintenance.

The following pages give detailed information on how and when to check your air pressure, how to inspect your tires for wear and damage, and our recommendations on tire repair and replacement.

Air Pressure

Properly inflated tires provide the best combination of handling, tread life, and riding comfort. Generally, underinflated tires wear unevenly, adversely affect handling, and are more likely to fail from being overheated.
Underinflated tires can also cause wheel damage on hard terrain. Overinflated tires make your motorcycle ride harshly, are more prone to damage from surface hazards, and wear unevenly.

Make sure the valve stem caps are secure. If necessary, install a new cap.

Always check air pressure when your tires are "cold." If you check air pressure when your tires are "warm" — even if your CR has only been ridden for a few miles — the readings will be higher. If you let air out of warm tires to match the recommended cold pressures, the tires will be underinflated.
The correct "cold" tire pressures are:

Front	15 psi (100 kPa, 1.0 kgf/cm^2)
Rear	15 psi (100 kPa, 1.0 kgf/cm^2)

If you decide to adjust tire pressures for a particular riding condition, make changes a little at a time.

Inspection

Take time to inspect your tires and wheels before you ride.

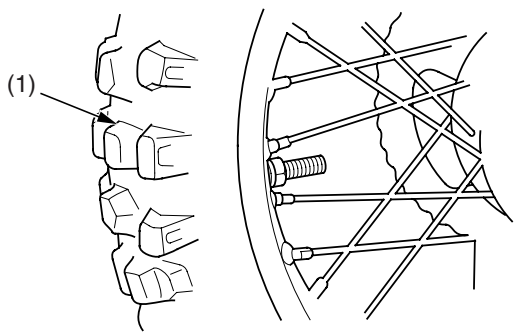

(1) tire tread depth

- Inspect carefully for bumps or bulges in the side of the tire or the tread. Replace any tire that has a bump or bulge.
- Look closely for cuts, slits, or cracks in the tires. Replace a tire if you can see fabric or cord.
- Check for rocks or other objects embedded in the tire or tread. Remove any objects.
- Measure tread depth (1). Replace the tire before depth at the center reaches 0.12 in (3 mm), or any time you notice a reduction in traction.
- Check the position of both valve stems. A tilted valve stem indicates the tube is slipping inside the tire or the tire is slipping on the rim.

Tube Replacement

If a tube is punctured or damaged, you should replace it as soon as possible. A repaired tube may not have the same reliability as a new one, and it may fail while you are riding.

Use a replacement tube equivalent to the original.

Tire Replacement

The tires that came on your CR were designed to provide a good combination of handling, braking, durability, and comfort across a broad range of riding conditions.

CR85R	Front	70/100-17 40M	
		DUNLOP	K490G
	Rear	90/100-14 49M	
		DUNLOP	K695
	Tire type	bias-ply, tube	
CR85RB	Front	70/100-19 42M	
		DUNLOP	K490
	Rear	90/100-16 52M	
		DUNLOP	K695
	Tire type	bias-ply, tube	

- Use a replacement tire equivalent to the original.
- Replace the tube any time you replace a tire. The old tube will probably be stretched and, if installed in a new tire, could fail.

Drive Chain

Refer to *Safety Precautions* on page 19.

The service life of the chain depends on proper lubrication and adjustment. Poor maintenance can cause premature wear or damage to the drive chain or sprockets.

When the motorcycle is ridden on unusually dusty or muddy tracks, more frequent maintenance will be necessary.

Before servicing your drive chain, turn the engine OFF, raise the rear wheel off the ground by placing the optional workstand or equivalent support under the engine and check that your transmission is in neutral.

Inspection

1. Turn the engine off, raise the rear wheel off the ground by placing the optional workstand or equivalent support under the engine and shift the transmission into neutral.
2. Check slack (1) in the upper drive chain run midway between the sprockets (2)(3). Drive chain slack should allow the following vertical movement by hand:
   1-3/4—2-3/16 in (45 - 55 mm)

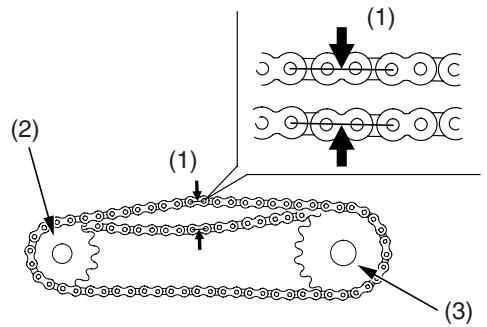

(1) drive chain slack
(2) drive sprocket
(3) driven sprocket

3. Check drive chain slack at several points along the chain. The slack should remain constant. If it isn't, some links may be kinked and binding. Lubricating the chain will often eliminate binding and kinking.

NOTICE

Excessive chain slack may allow the drive chain to damage the engine cases.

4. Inspect the drive chain for:
   - damaged rollers
   - loose pins
   - dry or rusted links
   - kinked or binding links
   - excessive wear

Replace the drive chain (page 65) if it has damaged rollers, loose pins, or kinks that cannot be freed. Lubricate the drive chain (page 65) if it appears dry or shows signs of rust. Lubricate any kinked or binding links and work them free. Adjust chain slack if needed.

5. Check the chain slider (4) for wear.
   If the wear is 0.16 in (4 mm) or more, replace it.

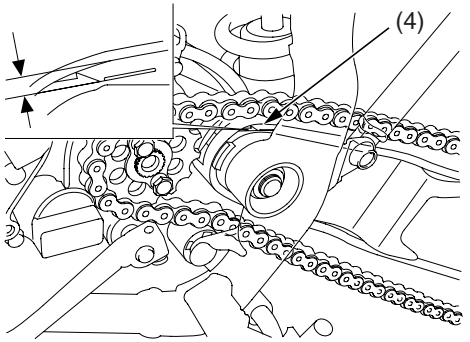

(4) chain slider

6. Check the chain guide slider (5) for wear. Replace the guide slider if the chain is visible through the wear inspection window (6).

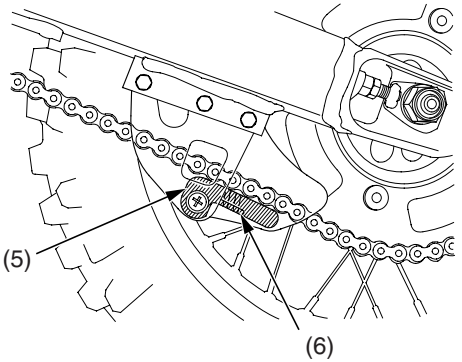

(5) chain guide slider
(6) inspection window

7. Check the drive chain roller (7) for wear. Replace it if necessary.
   Roller: 0.7 in (18 mm)

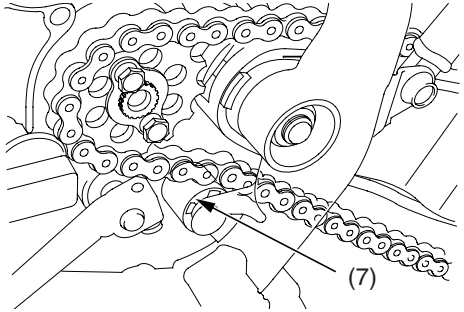

(7) drive chain roller

8. Check the driven sprocket nut torque values after each race.
   24 lbf·ft (32 N·m, 3.3 kgf·m)

Adjustment

1. Loosen the rear axle nut (1).
2. Loosen both the lock nuts (2) and turn the adjusting nuts (3) counterclockwise to decrease slack or clockwise to increase slack. Align the index marks (4) of the axle plates with the same reference marks (5) on both sides of the axle plates.

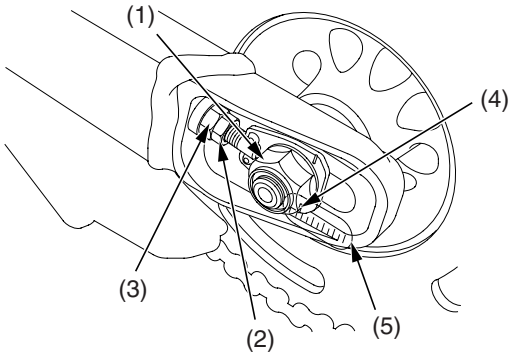

(1) rear axle nut
(2) lock nut
(3) adjusting nut
(4) index mark
(5) reference marks

3. Tighten the rear axle nut to the specified torque:
   65 lbf·ft (88 N·m, 9.0 kgf·m)
   Tighten the lock nut by holding the adjusting nut with a wrench.
4. Recheck chain slack and adjust as necessary.

Lubrication

Commercially prepared drive chain lubricants may be purchased at most motorcycle shops and should be used in preference to motor oil. Pro Honda Chain Lube or an equivalent, or SAE 80 or 90 gear oil is recommended.

Saturate each chain joint so that the lubricant penetrates the space between adjacent surfaces of the link plates and rollers.

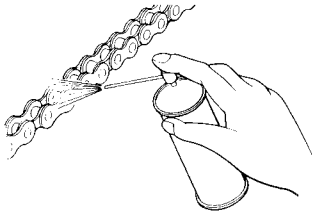

Removal, Cleaning & Replacement

For maximum service life, the drive chain should be cleaned, lubricated, and adjusted before each outing.

1. Remove the master link retaining clip (1) with pliers. Do not bend or twist the clip. Remove the master link (2). Remove the drive chain.

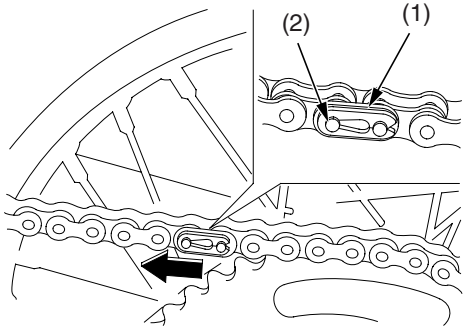

(1) retaining clip
(2) master link

2. Clean the drive chain in high flash-point solvent and allow it to dry.
3. Inspect the drive chain for possible wear or damage. Replace the drive chain if it has damaged rollers, loose or tight fitting links, or otherwise appears unserviceable.

   Replacement chain: RK420MSZ1

(cont'd)

4. Inspect the drive and driven sprocket teeth for wear or damage. We recommend replacing the sprocket whenever a new chain is installed.
   Both chain and sprockets must be in good condition, or the new replacement chain or sprocket(s) will wear rapidly.
   Excessively worn sprocket teeth have a hooked, worn appearance. Replace any sprocket which is damaged or excessively worn.

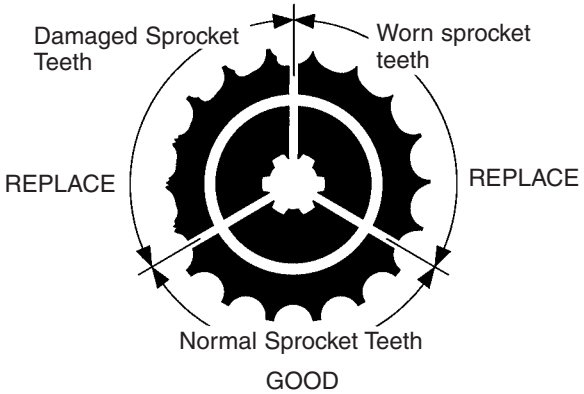

NOTICE

Use of a new chain with worn sprockets will cause rapid chain wear.

5. Measure a section of the drive chain to determine whether the chain is worn beyond its service limit. Put the transmission in gear, and then turn the rear wheel forward until the lower section of the chain is pulled taut. With the chain held taut and any kinked joints straightened, measure the distance between a span of 21 pins, from pin center to pin center. If the measurement exceeds the service limit, replace the chain. After the chain is measured, shift the transmission into neutral again before proceeding with inspection and service.

   Replacement chain: RK420MSZ1

   Service limit: 10.20 in (259.0 mm)

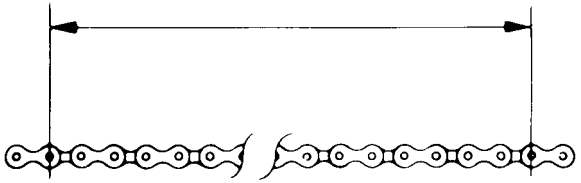

MEASURE A SPAN OF 21 PINS (20 PITCHES)

6. Lubricate the drive chain (page 65).
7. Pass the chain over the sprockets and join the ends of the chain with the master link. For ease of assembly, hold the chain ends against adjacent rear sprocket teeth while inserting the master link. Install the master link retaining clip so that the closed end of the clip will face the direction of forward wheel rotation.
8. Recheck chain slack and adjust as necessary.

More About: Drive Chain

- The master link is the most critical element of drive chain security. Master links are reusable, as long as they remain in excellent condition. We recommend installing a new master link retaining clip when the drive chain is reassembled.
- You may find it easier to install a new chain by connecting it to the old chain with a master link and pulling the old chain to position the new chain on the sprockets.

Refer to *Safety Precautions* on page 19.

Expansion Chamber Inspection

1. Check the expansion chamber spring, and replace it if it is damaged or stretched.
2. Check the flange bolts for tightness.
3. Check the expansion chamber for cracks or deformation.
   A damaged chamber may decrease engine performance.

Expansion Chamber Removal

1. Remove the expansion chamber by removing the expansion chamber spring (1) and mounting bolts (2).
2. Remove carbon deposits from the head pipe of the expansion chamber.

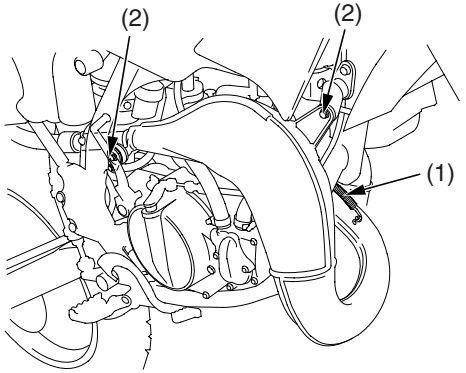

(1) expansion chamber spring (2) mounting bolts

Expansion Chamber/Installation

1. Inspect the O-rings (1). Replace the O-rings if they are damaged or otherwise appear unserviceable.
2. Install the O-rings and washer (2) as shown. If necessary apply grease to the washer.
3. Install the expansion chamber (3), expansion chamber spring (4) and mounting bolts (5).

   Tighten the front and rear mounting bolts to the specified torque:
   6.5 lbf·ft (8.8 N·m, 0.9 kgf·m)

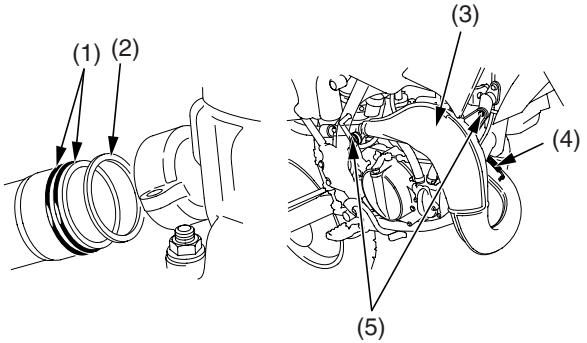

(1) O-rings
(2) washer
(3) expansion chamber
(4) expansion chamber spring
(5) mounting bolts

Refer to *Safety Precautions* on page 19.

Steering Stem Inspection

1. With your CR on a box or workstand (front wheel elevated), turn the handlebar to the right and left to check for roughness in the steering head bearings.
2. Stand in front of your CR, grab the fork (at the axle), look at the steering head, and push the fork in and out (toward the engine) to check for play in the steering head bearings. If any roughness or play is felt, but you do not see any movement in the steering head, the fork bushings may be worn. Refer to the Honda Service Manual for replacement or adjustment procedures, or see your Honda dealer.

Handlebar Inspection

1. Check the handlebar (1) for bends or cracks.
2. Check that the handlebar has not moved from its proper position (by inspecting the punch mark alignment).
3. Check the torque of the upper holder bolts (2) (Tighten the front bolts first).
   16 lbf·ft (22 N·m, 2.2 kgf·m)

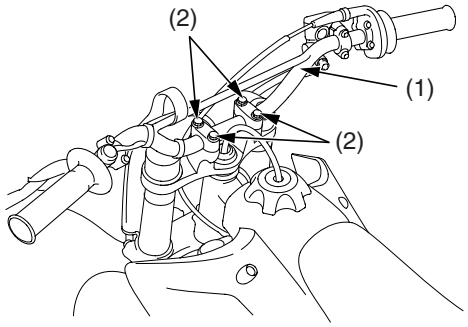

(1) handlebar (2) upper holder bolts

Control Cables

Periodically, disconnect the throttle and clutch cables at their upper ends. Thoroughly lubricate the cable pivot points with a commercially-available cable lubricant. If the clutch lever and throttle operation is not smooth, replace the cable.
Be sure the throttle returns freely from fully open to fully closed automatically, in all steering positions.

Nuts, Bolts, Fasteners

Check and tighten nuts, bolts, and fasteners before every outing.

	Item	Torque			Remarks
		lbf·ft	N·m	kgf·m	
	ENGINE				
1	Cylinder head	20	27	2.8	
2	Right crankcase cover	6.6	9	0.9	
3	Carburetor insulator	6.6	9	0.9	
4	Oil drain bolt	18	25	2.5	
5	Drive sprocket	10	13	1.3	
6	Alternator cover	1.7	2.3	0.2	

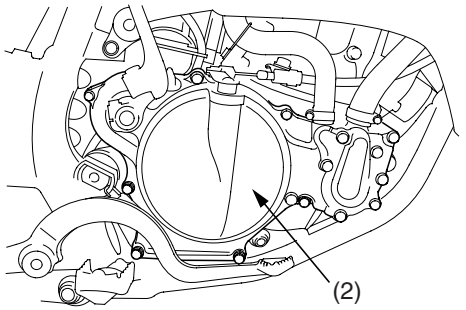

(2) right crankcase cover

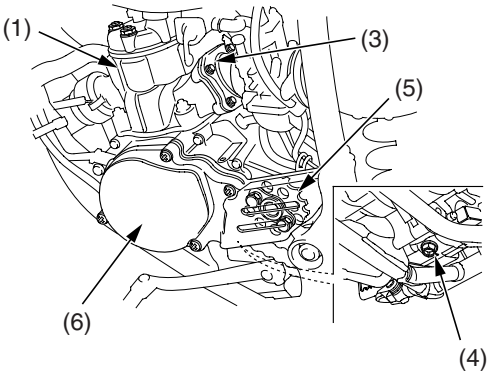

(1) cylinder head
(3) carburetor insulator
(4) oil drain bolt
(5) drive sprocket
(6) alternator cover

Refer to *Safety Precautions* on page 19.

Frequent cleaning and polishing will keep your Honda looking newer longer. Frequent cleaning also identifies you as an owner who values your CR. A clean CR is also easier to inspect and service.

While you're cleaning, be sure to look for damage, wear, and gasoline or oil leaks.

General Recommendations

- To clean your CR you may use:
  – water
  – a mild, neutral detergent and water
  – a mild spray and wipe cleaner/polisher
  – a mild spray and rinse cleaner/degreaser and water
- Avoid products that contain harsh detergents or chemical solvents that could damage the metal, paint, and plastic on your CR or discolor the seat and decals.
- If your CR is still warm from recent operation, give the engine and exhaust system time to cool off.
- We recommend the use of a garden hose to wash your CR. High pressure washers (like those at coin-operated car washes) can damage certain parts of your CR. The force of water under extreme pressure can penetrate the dust seals of the suspension pivot points and steering head bearings-driving dirt inside and needed lubrication out.
- If you use a high pressure washer, avoid spraying the following areas:

  wheel hubs
  expansion chamber outlet
  under seat
  engine stop button
  brake master cylinders
  under fuel tank
  drive chain
  carburetor
  front fork dust seal
  steering head bearings
  suspension pivot points

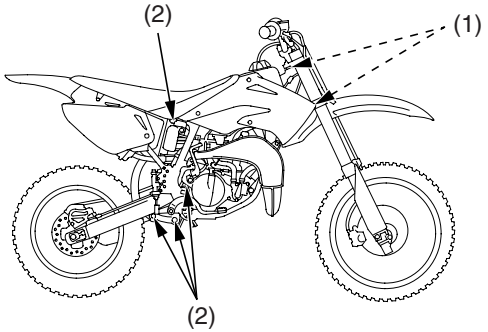

(1) steering head bearings
(2) suspension pivot points

NOTICE

High pressure water (or air) can damage certain parts of your CR.

You may use Pro Honda Hondabrite, a multi-surface cleaner/degreaser, to remove both dirt and petroleum-based grime from paint, alloy, plastic, and rubber surfaces. Wet any heavy deposits with water first. Then spray on the Hondabrite and rinse with a garden horse at full pressure. Stubborn deposits may require a quick wipe with a sponge.

Washing Your Motorcycle with a Mild Detergent

1. Rinse your CR thoroughly with cool water to remove loose dirt.
2. Fill a bucket with cool water. Mix in a mild, neutral detergent, such as dish washing liquid or a product made especially for washing motorcycles or automobiles.
3. Wash your CR with a sponge or a soft towel. As you wash, check for heavy grime. If necessary, use a mild cleaner/degreaser to remove the grime.

NOTICE

Do not use steel wool to clean the frame as it could damage or discolor the frame surface. Muffler stain remover (Scotch Brite Hand Pad #7447 – maroon) is for removing stains on the non-coated aluminum frame only.

4. After washing, rinse your CR thoroughly with plenty of clean water to remove any residue.
5. Dry your CR with a chamois or a soft towel.
6. Lubricate the drive chain to prevent rusting.
7. Start the engine and let it idle for several minutes. The engine heat will help dry moist areas.
8. As a precaution, ride at a slow speed and apply the brakes several times. This will help dry the brakes and restore normal braking performance.

Condensation Control

Changes in temperature combined with humidity allow moisture to form in some confined areas on your CR. The most affected area is the alternator/ ignition cavity in the left side of the crankcase.

Each time you wash your CR you should remove the alternator cover (1), wipe out any visible moisture, and allow the cavity to air dry for at least a couple of hours before installing the cover. Replace the gasket with a new one if it is not in good condition before installing the cover.

Some condensation can form within the transmission cavity as well. This is natural and just one more reason why you should change the transmission oil often.

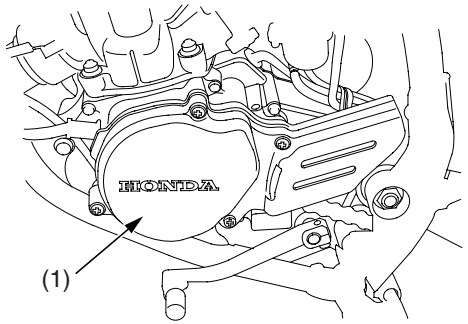

(1) alternator cover

After Cleaning Lubrication

There are some things you should do just after washing your CR to help prevent rust and corrosion.

Once your CR is clean and dry, you should protect any bare steel from rusting by applying a light coating of a rust-inhibitor. Lubricate the drive chain and drive sprocket after removing and thoroughly cleaning in solvent. Be sure the chain is wiped clean and is dry before applying the chain lube.

Follow the suggestions given in the pages of this manual for lubricating items such as the brake and clutch lever pivot points and footpeg pivot pins.

Adjustments for Competition

This section tells you how to fine tune your CR for maximum competition performance.

Initial suspension adjustments should be performed after a minimum of two hours of easy break-in time.

Optional front and rear suspension springs are available in both firmer and softer than standard rates, in order to tailor your CR specifically for your weight, riding style and course conditions.

Follow the instructions given in the rear suspension sag setting section of *Rear Suspension Adjustments* to determine if your combined rider and sprung machine weight (rider fully dressed for competition and machine coolant, oil and fuel levels ready for competition) requires an optional firmer or softer rear spring. The need for either optional rear spring may need to be balanced by installing the optional fork springs of a similar rate.

Front Suspension Adjustments.....72
Rear Suspension Adjustments.....80
Suspension Adjustment for Track Conditions....84
Suspension Adjustments Guidelines 85
Carburetor Adjustments & Tuning Tips.....88
Chassis Adjustments.....95
Gearing 96
Tire Selection for Track Conditions.....97
Personal Fit Adjustments 98

Front Suspension Adjustments

Refer to *Safety Precautions* on page 19.

The front suspension can be adjusted for the rider's weight and riding conditions by using one or more of the following methods:

- **Oil volume** — The effects of higher or lower fork oil level are only felt during the final 3.9 in (100 mm) of fork travel.
- **Compression damping** — Turning the compression damping screw adjusts how quickly the fork compresses.
- **Rebound damping** — Turning the rebound damping screw adjusts how quickly the fork extends.
- **Fork springs** — Optional springs are available in softer and stiffer types than the standard rate. (page 116)

Front Suspension Air Pressure

Air is an unstable gas which builds up pressure as it is worked (such as in a fork). Air pressure acts as a progressive spring and affects the entire range of fork travel. This means the fork action on your CR will get stiffer during a race. For this reason, release built-up air pressure in the fork legs between motos. Be sure the fork is fully extended with the front tire off the ground when you release the pressure.

The standard air pressure is 0 psi (0 kPa, 0 kgf/cm^2). You may relieve accumulated air pressure in the fork legs by using the pressure release screws. The front wheel should be off the ground before you release the pressure.

The air pressure should be adjusted according to the altitude and outside temperature.

1. Place a workstand under the engine, so that the front wheel is off the ground.
   Do not adjust air pressure with the front wheel on the ground as this will give false pressure readings.
2. Remove the pressure release screw (1) of each front suspension.
3. Check that the O-ring (2) is in good condition.
4. Install and tighten the pressure release screw to the specified torque:
   1.0 lbf·ft (1.3 N·m, 0.1 kgf·m)

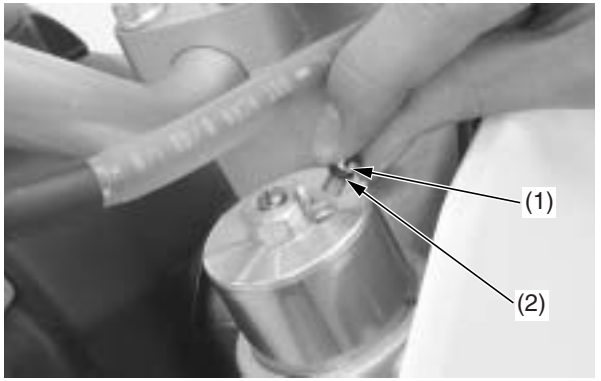

(1) pressure release screw (2) O-ring

Front Suspension Oil Level

- If your CR is brand-new, put enough part-throttle break-in time (about one hour) on it to ensure that the suspension has worked in.
- For optimum performance, and extended fork life, the fork should be completely disassembled and cleaned after the first 3 hours of riding. See the Service Manual or your Honda dealer for this service.

1. Place your CR on the optional workstand or equivalent support with the front wheel off the ground.
2. Loosen the upper pinch bolts (1) (before loosening the fork caps to avoid damaging the fork caps).
3. Loosen the fork caps (2), but do not remove them yet.

NOTICE

Using an adjustable wrench to loosen the fork caps may damage them.

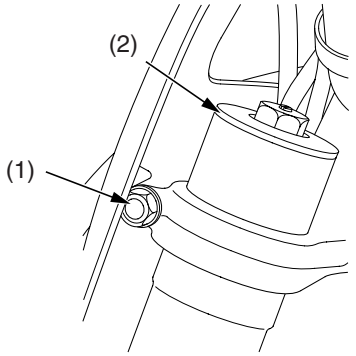

(1) upper pinch bolts (2) fork cap

4. Remove the axle nut (3).
5. Pull the front axle shaft (4) out of the wheel hub and remove the front wheel.

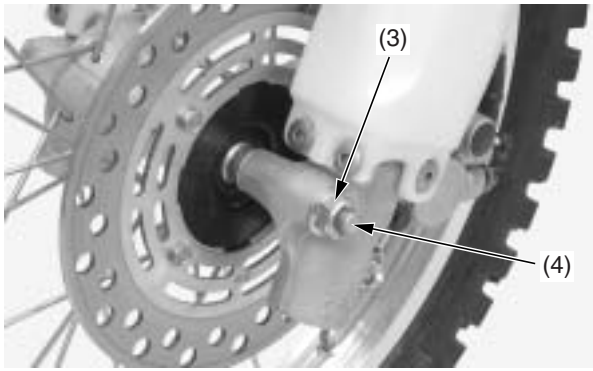

(3) axle nut (4) front axle shaft

6. Remove the fork protectors (5) and brake caliper (6).
   Do not support the brake caliper by the brake hose.
   Do not operate the brake lever after the front wheel is removed. To do so will cause difficulty in fitting the brake disc between the brake pads.

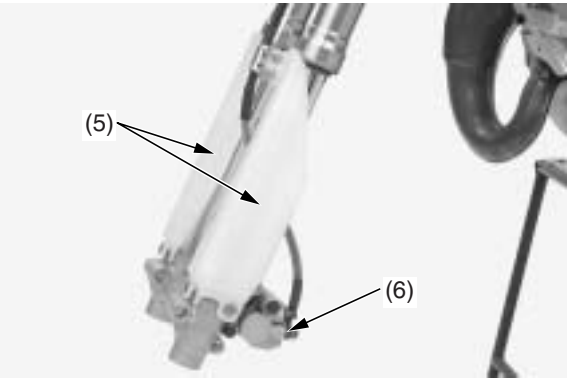

(5) fork protectors (6) brake caliper

7. Loosen the fork leg lower pinch bolts (7), then pull the fork legs down and out.

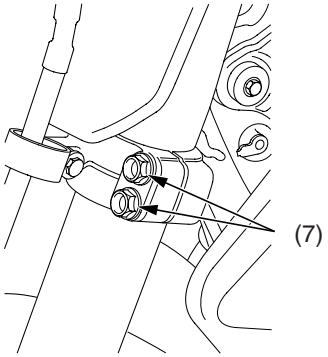

(7) lower pinch bolts

8. Clean the fork assembly, especially the sliding surface of the slider pipe (8) and dust seal (9).

NOTICE

The fork tube (10) can drop on the slider and damage the fork dust seal and guide bushing (11) when the fork cap is removed. To avoid damage hold both the fork tube and slider when removing the fork cap.

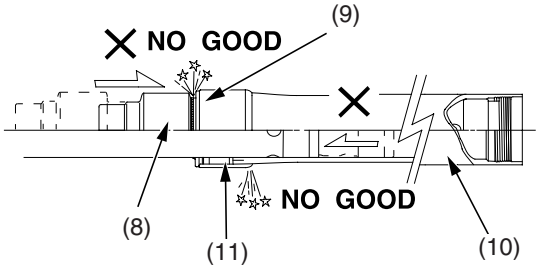

(8) slider pipe (10) fork tube
(9) dust seal (11) guide bushing

9. Record the rebound damping adjuster position and turn the adjuster screw (12) counterclockwise until it stops.

10. Hold the fork tube (10), then remove the fork cap (2), from the fork tube. Gently slide the fork tube down onto the lower end of the slider pipe (13).

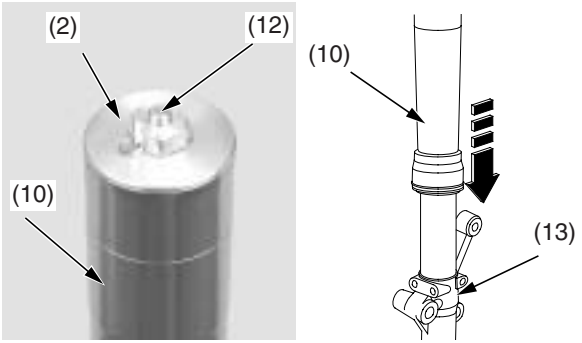

(2) fork cap (12) adjuster screw
(10) fork tube (13) slider pipe, lower end

NOTICE

When removing the fork cap, be careful not to damage the damping force adjuster needle rod (14) and the needle on the rod end.

11. Remove the fork cap (2) from the piston rod (15) by holding the lock nut (16).
12. Remove the fork spring (17).

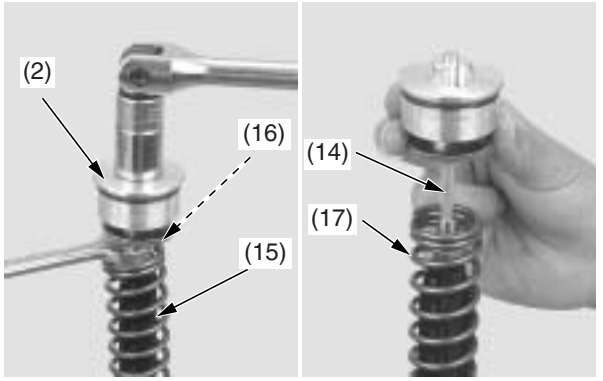

(2) fork cap (16) lock nut
(14) adjuster needle rod (17) fork spring
(15) piston rod

(cont'd)

13. Pour the recommended fork oil into the piston rod (15) until a little oil flows out of the top of the piston rod. Leave the piston rod for about 1 minute.
14. With the fork held upright, measure the oil level (18) from the top of the fork tube to the fork oil.

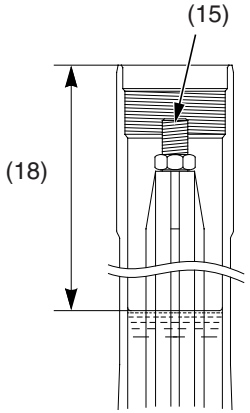

(15) piston rod (18) oil level

15. Adjust the oil level by adding or removing oil with an aftermarket syringe (19).

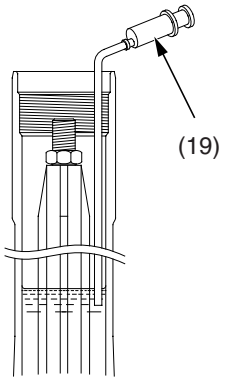

(19) syringe

Fork Oil Level (CR85R)

Standard (0.28 kgf/mm) Fork Spring

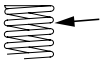

Standard oil level	4.0 in 101 mm	
Maximum oil level	3.7 in 95 mm	Slightly stiffer as it nears full compression.
Minimum oil level	4.2 in 106 mm	Slightly softer as it nears full compression.

Optional Softer (0.26 kgf/mm) Fork Spring

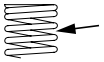

Standard oil level	3.9 in 99 mm	
Maximum oil level	3.7 in 93 mm	Slightly stiffer as it nears full compression.
Minimum oil level	4.1 in 104 mm	Slightly softer as it nears full compression.

Optional Stiffer (0.30 kgf/mm) Fork Spring

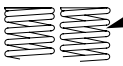

Standard oil level	3.9 in 99 mm	
Maximum oil level	3.7 in 93 mm	Slightly stiffer as it nears full compression.
Minimum oil level	4.1 in 104 mm	Slightly softer as it nears full compression.

Fork Oil Level (CR85RB)

Standard (0.28 kgf/mm) Fork Spring

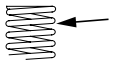

Standard oil level	4.0 in 102 mm	
Maximum oil level	3.7 in 95 mm	Slightly stiffer as it nears full compression.
Minimum oil level	4.2 in 106 mm	Slightly softer as it nears full compression.

Optional Softer (0.26 kgf/mm) Fork Spring

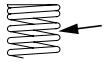

Standard oil level	3.8 in 96 mm	
Maximum oil level	3.6 in 92 mm	Slightly stiffer as it nears full compression.
Minimum oil level	3.9 in 100 mm	Slightly softer as it nears full compression.

Optional Stiffer (0.30 kgf/mm) Fork Spring

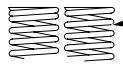

Standard oil level	4.1 in 105 mm	
Maximum oil level	4.0 in 102 mm	Slightly stiffer as it nears full compression.
Minimum oil level	4.3 in 110 mm	Slightly softer as it nears full compression.

- Be sure the oil level is the same in both fork legs.
- Always use the after market syringe while adjusting the oil level.
  If it isn't used, air may get into the fork.
- If a syringe is not available, first set the oil level somewhat lower than the normal level, then add small amounts of oil until the correct level is obtained, measuring the level each time oil is added.

16. Inspect both ends of the fork spring. If you find any roughness or burred edge on the end of either spring, smooth the roughness with a file and some emery cloth.

(cont'd)

17. Clean the spring and spring seat thoroughly with a high flash point solvent to remove all metal particles and dirt.
18. Dry the spring and spring seat with air pressure rather than a shop towel. Using a shop towel allows lint to stick to the springs. Lint or any particles that stick in the damping passages can cause inconsistent damping.
19. Check that the O-rings (20) on the fork cap and needle rod are in good condition. Apply the recommended fork oil to the O-rings.

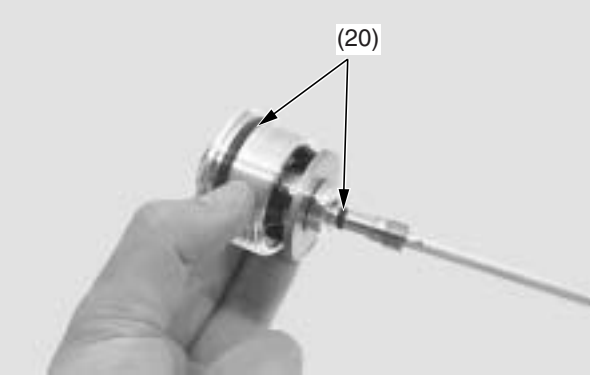

(20) O-rings

20. Loosen the lock nut (16) slightly.
21. Attach a two-foot length of mechanic's wire (21) to the threaded portion on the lock nut. Wrap the wire securely around the threads.

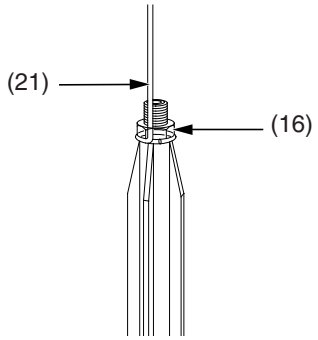

(16) lock nut (21) mechanic's wire

22. Install the fork spring (17) as follows:
    – With the fork spring held upright on its marked end, feed the mechanic's wire up through the spring.
    – Angle the fork spring and slowly slide it down into the fork using a gentle rocking motion.
23. Reaching through the two adjacent coils near the oil lock valve, hold the spring guide (22) with your finger.
    Remove the mechanic's wire and hand tighten the lock nut (16).

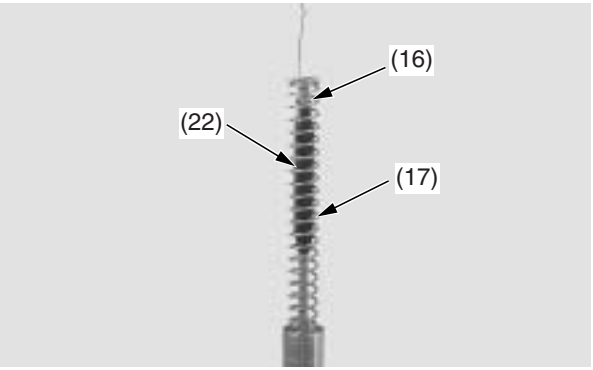

(16) lock nut (22) spring guide
(17) fork spring

24. Install the fork cap assembly into piston rod.

NOTICE

When installing the fork cap, be careful not to damage the damping force adjuster needle rod and the needle or the rod end.

25. Screw the fork cap (2) on the piston rod. Hold the lock nut (16) and tighten it to the specified torque:
    15 lbf·ft (19.7 N·m, 2.0 kgf·m)

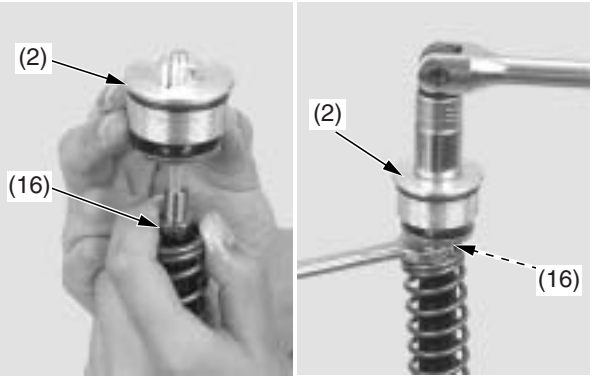

(2) fork cap (16) lock nut

26. Temporarily thread the fork cap into the fork tube.
27. Insert both fork legs into the fork clamps.

28. Align the groove (23) in the fork tube (10) with the top surface of the upper fork clamps (24).
29. Temporarily tighten the fork lower pinch bolts (7) and then tighten the fork cap (2) to the specified torque:
    25 lbf·ft (34 N·m, 3.5 kgf·m)
30. For ease of releasing air pressure after the forks are installed, loosen the lower pinch bolts and position the fork outer tubes so that the pressure release screws are in front of the rebound damping adjusters.
31. Tighten the fork lower pinch bolts to the specified torque:
    16 lbf·ft (22 N·m, 2.2 kgf·m)
32. Tighten the fork upper pinch bolts (1) to the specified torque:
    16 lbf·ft (22 N·m, 2.2 kgf·m)

NOTICE

Over-tightening the pinch bolts can deform the fork tubes. Deformed fork tubes must be replaced.

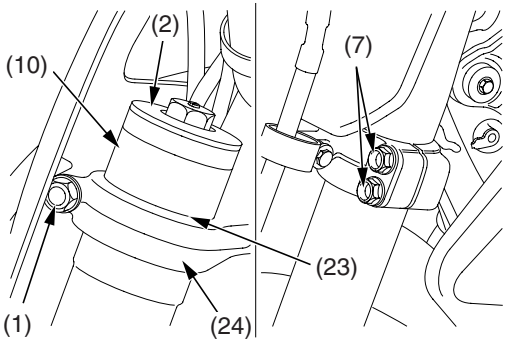

(1) upper pinch bolts
(2) fork cap
(7) lower pinch bolts
(10) fork tube
(23) groove
(24) upper fork clamp

33. Clean the threads of the fork protector bolts and axle holder thoroughly.
34. Apply locking agent to the bolt threads.
35. Install the fork protectors (5) and tighten the bolts to the specified torque:
    5.2 lbf·ft (7 N·m, 0.7 kgf·m)

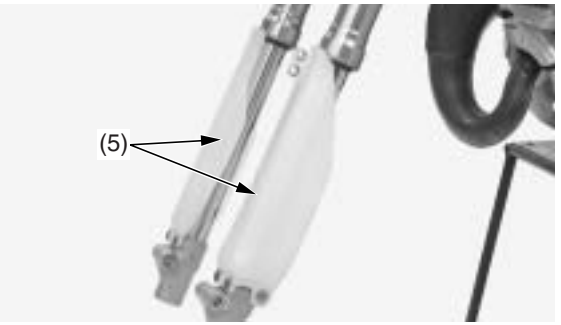

(5) fork protectors

36. Clean the surfaces where the front axle shaft and axle clamps contact each other.
37. Install the left and right side collars into the wheel hub.
38. Insert the front axle shaft through the wheel hub from the right side. Make sure the axle shaft is seated firmly onto the left fork leg clamp inner surface.
39. Tighten the axle nut (3) to the specified torque:
    46 lbf·ft (62 N·m, 6.3 kgf·m)

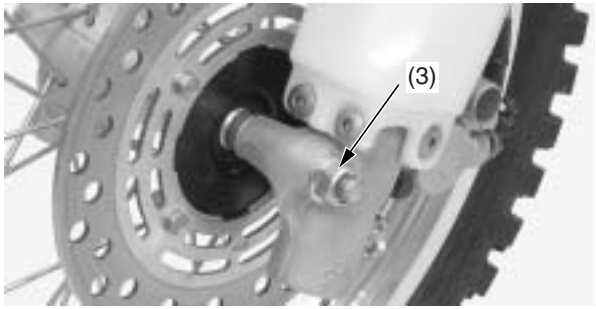

(3) axle nut

40. Align the brake caliper (6) and hose with the left fork leg, making sure that the brake hose is not twisted. An improperly routed brake hose may rupture and cause a loss of braking efficiency.
41. Clean the threads of the caliper mounting bolts (25) and brake caliper thoroughly.
42. Apply locking agent to the bolt threads.
43. Install the brake caliper on the fork slider and tighten the caliper bolts to the specified torque:
    22 lbf·ft (30 N·m, 3.1 kgf·m)

NOTICE

Fit the brake caliper over the disc, taking care not to damage the brake pads.

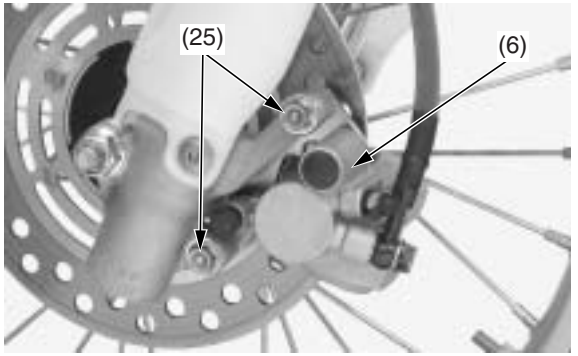

(6) brake caliper (25) caliper mounting bolts

(cont'd)

44. With the front brake applied, pump the fork up and down several times to seat the axle and check front brake operation.

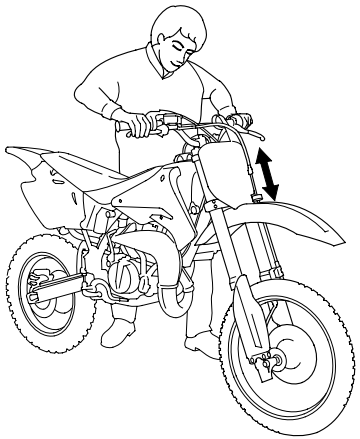

45. Turn the rebound damping adjuster screws back to their original settings.

Front Suspension Damping

Compression Damping
Compression damping affects how quickly the fork compresses.

The compression damping adjuster has 15 positions or more. Turning the adjuster screw one full turn advances the adjuster 4 positions.

Always start with the full hard position when adjusting damping.

To adjust to the standard position:

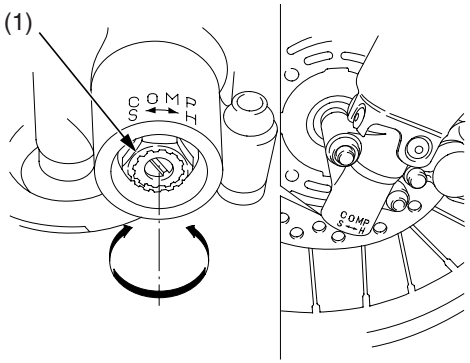

(1) compression damping adjuster

1. Turn the compression damping adjuster (1) clockwise until it will no longer turn (lightly seats). This is the full hard position.
2. Turn the adjuster counterclockwise 9 (CR85R), 10 (CR85RB) clicks.
   This is the standard position.
3. Make sure that both fork legs are adjusted to the same position.

Rebound Damping
Rebound damping effects how quickly the fork rebounds.

The rebound damping adjuster has 3 turns or less.

Always start with the full hard position when adjusting damping.

To adjust to the standard position:

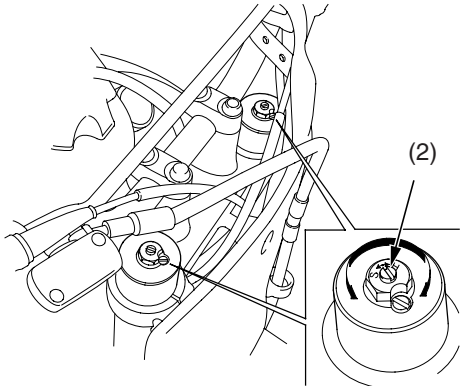

(2) rebound damping adjuster

1. Turn the rebound damping adjuster (2) clockwise until it will no longer turn (lightly seats). This is the full hard position.
2. Turn the adjuster counterclockwise 3/4 (CR85R), 1-1/4 (CR85RB) turns. This is the standard position.
3. Make sure both fork legs are adjusted to the same position.

Fork Springs

The fork springs in CR's are about right for riders weighting between 150 and 160 lbs (less riding gear). So if you're a heavier rider, you have to go up on the oil level or get a stiffer spring. Do not use less oil than the minimum specified for each spring or there will be a loss of rebound damping control near full extension.
If the fork is too hard on big bumps, turn the damping adjuster counterclockwise one-click and lower the oil level in increments of 0.2 in (5 mm) in both fork legs until the desired performance is obtained. Do not, however, lower the oil level below the minimum oil level.

Minimum oil level: (CR85R)

Standard Spring:	4.2 in (106 mm)
Softer Spring:	4.1 in (104 mm)
Stiffer Spring:	4.1 in (104 mm)

Minimum oil level: (CR85RB)

Standard Spring:	4.2 in (106 mm)
Softer Spring:	3.9 in (100 mm)
Stiffer Spring:	4.3 in (110 mm)

When adjusting oil levels, bear in mind that the air in the fork will increase in pressure while riding; therefore, the higher the oil level, the higher the eventual pressure of any air in the fork.

Fork Travel Characteristics

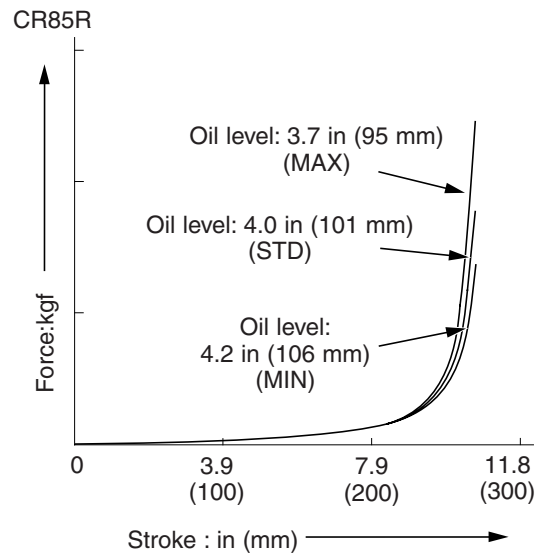

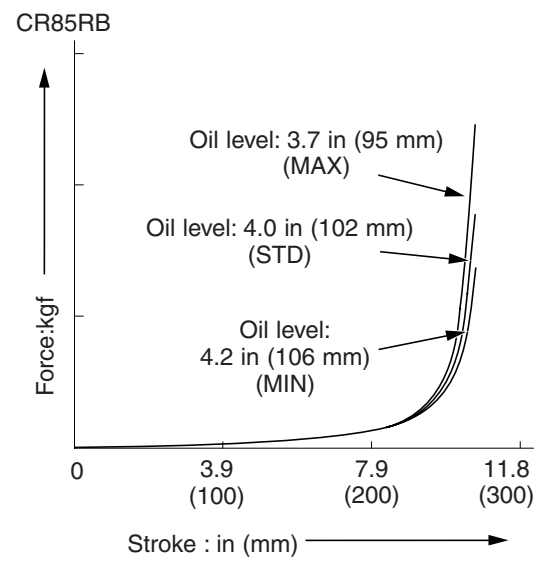

Rear Suspension Adjustments

Refer to *Safety Precautions* on page 19.

The rear suspension can be adjusted for the rider's weight and riding conditions by changing the spring pre-load and the rebound and compression damping.

The rear shock absorber assembly includes a damper unit that contains high pressure nitrogen gas. Do not attempt to disassemble, service, or dispose of the damper; see your Honda dealer. The instructions found in this owner's manual are limited to adjustments of the shock assembly only.

Puncture or exposure to flame may also result in an explosion, causing serious injury.
Service or disposal should only be done by your authorized Honda dealer or a qualified mechanic, equipped with the proper tools, safety equipment and the official Honda Service Manual.

If your CR is new, put enough part-throttle break-in time (about one hour) on it to ensure that the suspension has worked in.

Rear Suspension Spring Pre-Load

An optional pin spanner is available for turning the lock nut and adjusting nut to adjust spring pre-load.

1. Place a workstand under the engine to raise the rear wheel off the ground.
2. Remove the subframe. See page 32.
3. Check that the spring pre-load is adjusted to the standard length. Adjust as necessary by loosening the lock nut (1) and turning the adjusting nut (2).
   Each complete turn of the adjuster nut changes the spring length by 1/16 in (1.5 mm).

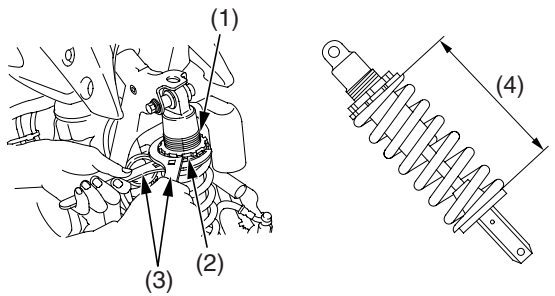

(1) lock nut
(2) adjuster nut
(3) pin spanners
(4) spring length

To increase spring pre-load:
Loosen the lock nut with the optional pin spanner (3) and turn the adjusting nut to shorten the spring length (4). Do not shorten to less than:
8.7 in (221 mm).....CR85R
8.9 in (225 mm).....CR85RB

To decrease spring pre-load:
Loosen the lock nut with the optional pin spanner (3) and turn the adjusting nut to increase the spring length (4). Do not increase to more than:
9.4 in (238 mm)

Each turn of the adjuster changes spring length and spring pre-load. One turn equals: spring length/spring pre-load:
1/16 in (1.5 mm)

Pin spanners should be used for turning the lock nut and adjusting nut. See page 116 for optional pin spanners.

(CR85R)
Spring pre-load length (Standard spring)
Standard: 9.3 in (237 mm)
Min. : 8.7 in (221 mm)

Spring pre-load length (Optional spring)
Min. (Softer, 4.6 kgf/mm): 8.6 in (218 mm)
Min. (Softer, 4.8 kgf/mm): 8.7 in (222 mm)
Min. (Stiffer, 5.2 kgf/mm): 8.9 in (225 mm)
Min. (Stiffer, 5.4 kgf/mm): 8.7 in (220 mm)

(CR85RB)
Spring pre-load length (Standard spring)
Standard: 9.0 in (229 mm)
Min. : 8.9 in (225 mm)

Spring pre-load length (Optional spring)
Min. (Softer, 4.8 kgf/mm): 8.7 in (222 mm)
Min. (Softer, 5.0 kgf/mm): 8.7 in (221 mm)
Min. (Stiffer, 5.4 kgf/mm): 8.7 in (220 mm)
Min. (Stiffer, 5.6 kgf/mm): 8.9 in (225 mm)

Rear Suspension Damping

Compression Damping
Compression damping can be adjusted with the adjuster located on the rear shock absorber's reservoir.

To increase damping, turn the adjuster screw clockwise.

To decrease damping, turn the screw counterclockwise.

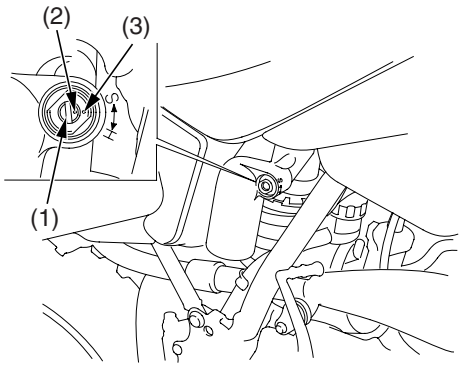

(1) adjuster
(2) punch mark
(3) reference mark

To adjust to the standard position:
1. Turn the adjuster (1) clockwise until it will no longer turn (lightly seats). This is the full hard position.
2. Turn the adjuster counterclockwise approximately 1-3/4 (CR85R), 3/4 (CR85RB) turns so that the punch mark (2) on the adjuster aligns with the reference mark (3) on the shock absorber.

Rebound Damping
The rebound damping adjuster (4) is located at the lower end of the shock absorber.

To increase damping, turn the adjuster screw clockwise.

To decrease damping, turn the adjuster screw counterclockwise.

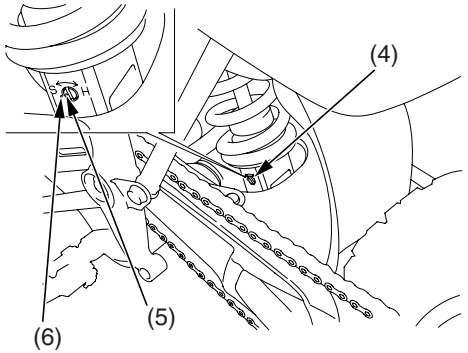

(4) rebound damping adjuster
(5) punch mark
(6) reference mark

To adjust to the standard position:
1. Turn the adjuster clockwise until it will no longer turn (lightly seats). This is the full hard position.
2. Turn the adjuster counterclockwise approximately 1-1/4 (CR85R), 1/2 (CR85RB) turns so that the punch mark (5) on the adjuster aligns with the reference mark (6) on the shock absorber.

Rear Suspension Race Sag

Setting the proper race sag (ride height) is very important for competition use.

Race sag refers to the amount of rear wheel travel used by your CR at rest, ready to ride, with you on the seat. As a general rule of thumb, the race sag dimension should be about one-third of the maximum travel.

On your CR, ride height is changed by adjusting the rear suspension spring pre-load.

Spring Pre-load & Race Sag Adjustment
The following adjustment procedure establishes the correct starting point for any suspension tuning — the proper rear spring pre-load adjustment for your specific needs.
Your CR should be at normal racing weight, including fuel and transmission oil. You should be wearing all your normal protective apparel. You will need two helpers.

To calculate the proper adjustment, it is necessary to measure between two fixed points — from the center of the seat mounting bolt to the edge of the last chain adjuster mark, as illustrated — for three different situations:

unloaded: motorcycle on workstand with rear suspension fully extended, no rider.
loaded with rider: motorcycle on ground, with rider.
loaded without rider: motorcycle on ground, without rider

1. Support your CR on a workstand with the rear wheel off the ground.
2. Measure the *unloaded* dimension.

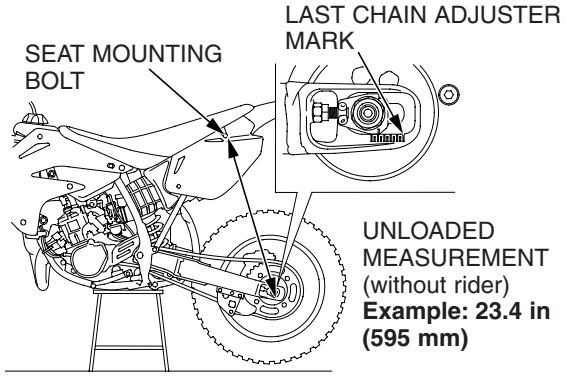

3. Measure the *loaded with rider* dimension. Remove the workstand. With two helpers available, sit as far forward as possible on your CR's seat, wearing your riding apparel. Ask one helper to steady your CR perfectly upright so you can put both feet on the pegs. Bounce your weight on the seat a couple of times to help the suspension overcome any situation and settle to a good reference point.

   Ask the other helper to measure the *loaded with rider* dimension.

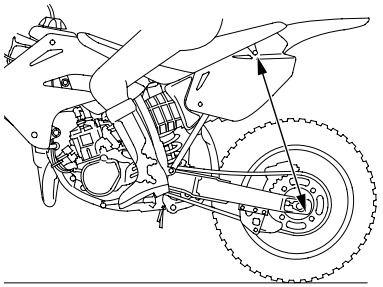

Race Sag Calculation:

unloaded	23.4 in (595 mm)
—loaded with rider	20.1 in (510 mm)
Race Sag	3.3 in (85 mm)

4. Calculate the *race sag* dimension. To do this, subtract the *loaded with rider* dimension (step 3) from the *unloaded* dimension (step 2).

   Standard Race Sag: 3.3 in (85 mm)

   Adjust spring pre-load as necessary to obtain the desired handling results.
   Decreasing the race sag dimension (example: 3.5 in, 90 mm) improves turning ability for tight terrain at the cost of slightly reduced straight line stability.
   Increasing the race sag dimension (example: 3.9 in, 100 mm) may improve stability on faster terrain with less turns, but will reduce turning performance slightly and may upset the balance between the front and rear suspension, producing a harsher ride. This will happen if the adjustment shifts the effective wheel travel toward the more progressive end of its range.
5. Measure the *loaded without rider* dimension. Do this with your CR set at the standard race sag.

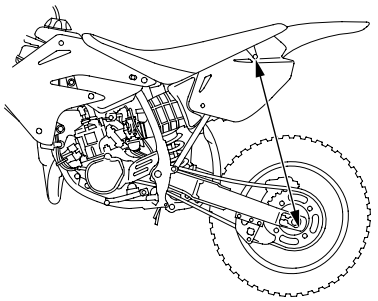

Free Sag Calculation:

unloaded	23.4 in (595 mm)
—loaded W/O rider	22.8 in (580 mm)
Free Sag	0.6 in (15 mm)

6. Calculate the *free sag* dimension.
   To do this, subtract the *loaded without rider* dimension (step 5) from *the unloaded* dimension (step 2).
   Free sag indicates the distance your rear suspension should sag from the weight of the sprung portion of your CR.
   With the spring pre-load set to obtain the proper race sag, the rear suspension should sag 0.4 to 1.0 in (10 to 25 mm).
   If the rear of your CR sags more than 1.0 in (25 mm) from its own weight, the spring is too stiff for your weight. It is not compressed enough, even though you have the proper race sag adjustment. As a result, the rear suspension will not extend as far as it should.

Spring Rates

If you are lighter or heavier than the average rider and cannot set the proper ride height without altering the correct spring pre-load, consider an aftermarket shock absorber spring.

A spring that is too soft for your weight forces you to add excessive spring pre-load to get the right race sag and, as a result, the rear end of the motorcycle is raised. This can cause the rear wheel to unload too much in the air and top out as travel rebounds. The rear end may top out from light braking, or kick sideways over lips and square-edged terrain. It may even top-out when you dismount your CR.

Because of the great absorption quality of the shock bumper rubber, it may be difficult for you to notice when your CR's suspension is bottoming. Some riders may think the damping or perhaps the leverage ratio is too harsh. In reality, the problem is most likely insufficient spring pre-load or a spring that is too soft. Either situation prevents utilizing the full travel.

Keep in mind that a properly adjusted suspension system may bottom slightly every few minutes at full speed. Adjusting the suspension to avoid this occasional bottoming may cost more in overall suspension performance than it is worth.

A spring that is too firm for your weight will not allow the rear tire to hook up under acceleration and will pass more bumps on to you.

Suspension Adjustments for Track Conditions

Soft Surface
On soft ground, sand, and especially mud, consider increasing compression damping front and rear.

Sand often requires a bit more rebound damping to minimize rear end kick. Although sand bumps are usually larger, there's more distance between them, giving the shock more time to recover.

You may want a little bit stiffer front suspension for sand tracks to help keep the front end up and improve straight-line stability.

In a muddy event, stiffer aftermarket springs front and rear may help, especially if you are heavier than the average rider. Your CR may be undersprung because of the added weight of the clinging mud. This additional weight may compress the suspension too much and affect traction.

Hard Surface
On harder ground, run less compression damping.

For a fast, hard track with no large jumps, you can probably run the same spring as normal, but run softer damping both ways-compression and rebound. If you run softer rebound damping, the wheel will follow the rough ground and small bumps much better, and you will hook up better. With a lot of rebound damping, the wheel returns very slowly and doesn't contact the ground quickly enough after each bump. The result is a loss of traction and slower lap times.

Suspension Adjustment Guidelines

Follow the procedures described below to accurately adjust your CR, using the methods described on pages 72 - 84. Remember to make all adjustments in one-click increments. Test ride after each adjustment.

Front Suspension Adjustment
Adjustments for Type of Track

Hard-surfaced track	Begin with the standard setting. If the suspension is too stiff/soft, adjust according to the chart below.
Sand track	Adjust to a stiffer position. Example: – Turn the compression damping adjuster to a stiffer position. – Install the optional stiff spring. (Adjust compression damping to a softer position and rebound damping to a harder position at this time.)
Mud track	Adjust to a stiffer position because mud build-up increases your CR's weight. Example: – Turn the compression damping adjuster to a stiffer setting. – Install the optional stiff spring.

Adjustments for Too Soft/Stiff Damping

	Symptom	Action
Soft suspension	Initial travel too soft: • Steering is too quick. • Front end darts while cornering or riding in a straight line.	– Test stiffer compression damping adjustments in one-click increments. – Test stiffer rebound damping in 1/4 turn increments.
	Middle travel too soft: • Front end dives when cornering.	If suspension isn't stiff in initial travel: – Test stiffer compression damping adjustments in one-click increments. If initial travel becomes stiff because of the above adjustment: – Reduce the rebound damping in 1/4 turn increments. – Test softer compression damping adjustments in one-click increments. If that doesn't solve the problem, install the optional stiff spring.
	Final travel too soft: • Bottoms on landings. • Bottoms on large bumps, especially downhill bumps.	If initial and middle travel aren't stiff: – Test stiffer compression damping adjustments in one-click increments. If initial and middle travel are stiff: – Install the optional stiff spring. If initial travel is stiff after installing the optional stiff spring: – Test soft compression damping adjustments in one-click increments. If initial travel is still soft after installing the optional stiff spring: – Test stiffer compression damping adjustments in one-click increments. If final travel is still soft after installing the optional stiff spring: – Increase the fork oil level in increments of 0.2 in (5 mm).
	Entire travel too soft: • Front end shakes. • Fork bottoms over any type of terrain.	– Install the optional stiff spring. – Test stiffer compression damping adjustments in one-click increments. – Increase rebound damping in 1/4 turn increments.

Suspension Adjustment Guidelines

	Symptom	Action
Stiff suspension	Initial travel too stiff: • Stiff on small bumps while riding at full throttle in a straight line. • Stiff on small cornering bumps. • Front end wanders while riding at full throttle in a straight line.	– Test softer compression damping adjustments in one-click increments. – Reduce the rebound damping adjustments in 1/4 turn increments. – Check for dirt in the dust seals. Check the fork oil for any contamination. If the front end dives while cornering, reduce the rebound damping in 1/4 turn increments. If that doesn't solve the problem, install the optional stiff spring. If the stiff spring makes the suspension too stiff over the full range of travel: test softer compression damping adjustments in one-click increments until the desire compression damping for initial travel is obtained.
	Middle travel too stiff: • Stiff on bumps when cornering. • Front end wanders when cornering. • Stiff suspension on bumps, especially downhill bumps. • While braking, front end dives during initial travel, then feels stiff.	If initial travel isn't stiff: – Test stiffer compression damping adjustments in one-click increments. (This should produce smooth fork action from initial to middle travel.) If initial and middle travel is stiff: – Test softer compression damping adjustments in one-click increments. – Reduce the rebound damping in 1/4 turn increments.
	Final travel too stiff: • Doesn't bottom on landings, but feels stiff. • Stiff on large bumps, especially downhill bumps. • Stiff on large bumps when cornering.	If initial and middle travel aren't stiff: – Test stiffer compression damping adjustments in one-click increments. (This should produce smooth fork action from initial to middle travel.) If final travel is still stiff after the above adjustment, or If initial and middle travel becomes stiff: – Install the optional soft spring. – Test softer compression damping adjustments in one-click increments. If the entire travel feels stiff after the above adjustment: – Test softer compression damping adjustments in one-click increments until the desired initial travel compression damping is obtained. – Lower the oil level by 0.2 in (5 mm).
	Entire travel too stiff: • Stiff suspension on any type of terrain.	– Test softer compression damping adjustments in one-click increments. – Reduce the rebound damping in 1/4 turn increments. – Lower the oil level by 0.2 in (5 mm).

Rear Suspension Adjustment
Adjustments for Type of Track

Hard-surfaced track	Begin with the standard settings. If the suspension is too stiff/soft, adjust according to the chart below.
Sand track	Lower the rear end (to improve front wheel stability) by increasing Race Sag (reduce spring preload). Example: – Turn the compression damping adjuster and, especially, rebound damping adjuster to a stiffer setting. – Increase standard Race Sag (+0.2 to 0.4 in/5 to 10 mm).
Mud track	Adjust to a stiffer position because mud build-up increases your CR's weight. Example: – Adjust the compression and rebound damping adjusters to stiffer settings. – Install the optional stiff spring. – Reduce standard Race Sag (–0.2 to 0.4 in/5 to 10 mm).

Adjustments for Too Soft/Stiff Suspension

	Symptom	Action
Stiff suspension	Entire travel too stiff	– Test softer compression and rebound damping adjustments in one-click increments. – Install the optional soft spring.
Soft suspension	Suspension bottoms or rear end shakes:	– Test stiffer comression and rebound damping adjustments in one-click increments. – Install the optional stiff spring.

Adjustments for Too Soft/Stiff Suspension

Symptom	Action
Rear end kicks up on deep bumps on sand track.	– Test stiffer compression and rebound damping adjustments in 1/4 turn increments until the rear end does not kick up and/or the suspension becomes stiff. – Then test softer compression damping adjustments in 1/4 turn increments.
Suspension bottoms and rear end kicks up on large bumps on a hard-surface track.	– Test stiffer compression and rebound damping adjustments in 1/4 turn increments.
Rear end gets poor traction accelerating away from a corner.	– Test softer rebound damping adjustments in 1/4 turn increments. (Test no more than 2-1/2 turns.) – If 1/2 or 3/4 turns don't produce satisfactory results, test softer compression damping adjustments in 1/4 turn increments. – After the above adjustment, check if the suspension bottoms after jumping. If it does, test stiffer compression damping adjustments in 1/4 turn increments.
Rear end kicks sideways and suspension feels stiff on continuous bumps.	– Test softer rebound damping adjustments in 1/4 turn increments. – After the above adjustment, check if the suspension bottoms after jumping. If it does, test stiffer compressi on damping adjustments in 1/4 turn increments.

Carburetor Adjustments & Tuning Tips

Refer to *Safety Precautions* on page 19.

The carburetor on your CR should perform suitably with the standard recommended settings under average load, climatic, and barometric conditions. However, to fine tune the engine's power output, the carburetor may require adjustments for specific competition needs.

Optional main jets and slow jets are available for your motorcycle. See your Honda dealer.

Any engine or airbox modifications or the use of an aftermarket exhaust system may require jetting changes.

Carburetor Components

Starting Circuit
A very rich mixture must be delivered to the cylinder when the engine is being started. When the choke knob (1) is pulled up, fuel is metered by the starter jet (2) and is mixed with air from the air passage (3) to provide a rich mixture for starting. The mixture discharges through the orifice (4) into the cylinder.

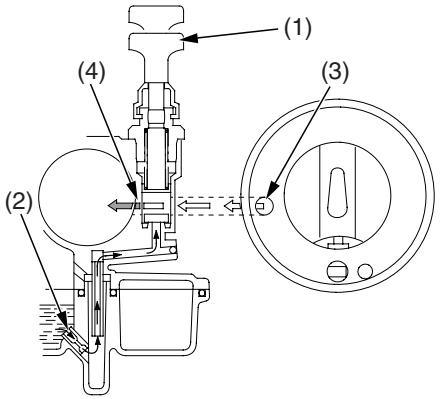

(1) choke knob
(2) starter jet
(3) air passage
(4) orifice

Slow Circuit
Fuel is metered by the slow jet (5) and is mixed with air that has been metered by the air screw (6). The mixture enters the venturi through the bypass (7) and slow jet circuit outlet (8).

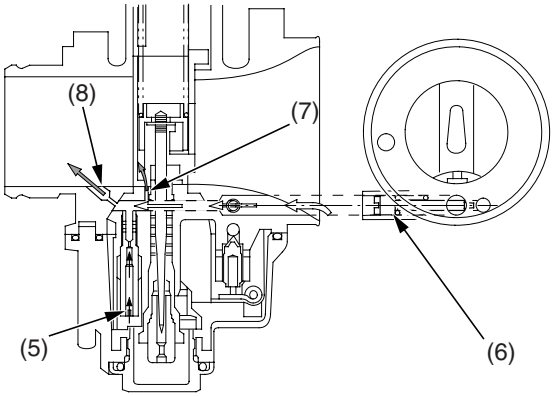

(5) slow jet
(6) air screw
(7) bypass
(8) slow jet circuit outlet

Main Circuit
Fuel is metered by the main jet (9), jet needle (10) and needle jet (11). It is then mixed with air coming from the air jet (12) and enters the venturi at the nozzle (13).

Float Chamber
The float (14) and float valve (15) operate to maintain a constant level of fuel in the float bowl (16) .

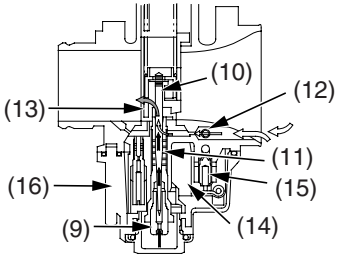

(9) main jet
(10) jet needle
(11) needle jet
(12) air jet
(13) nozzle
(14) float
(15) float valve
(16) float bowl

Carburetor Circuit Functions

The carburetor has several major circuits, each providing the fuel/air mixture over a given range of throttle valve opening.

These major circuits overlap as shown below.

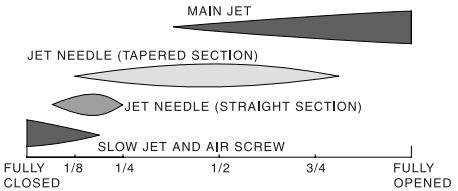

Main Jet
The main jet affects air/fuel ratio from half to full throttle. The size should be reduced at higher altitudes.

Honda carburetor jet sizes are numbered in increments of 2or3. When changing the main jet size, increase or decrease it gradually until the desired setting is obtained. Because your CR's jet size numbers do not correspond with other carburetor manufacturer's jet size numbers, use only Honda jets.

Jet Needle

The jet needle controls fuel/air mixture over 1/16 to 3/4 throttle. The straight section (1) affects throttle response at smaller throttle openings. By changing the position of the clip (2) in its groove, you can improve acceleration at medium low and medium speed.

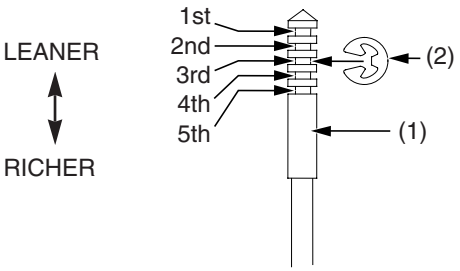

(1) straight section (2) clip

Slow Jet and Air Screw

Refer to *Carburetor Minor Adjustments* (Page 91).

Standard Tuning Recommendations

For the following recommendations to be accurate, you must use the standard settings as a baseline. Also, don't change any of the settings until you've determined what changes are necessary.

Adjustment	Standard settings
Air screw opening	2 turns out
Slow jet	#45
Jet needle	NFSF
Needle clip position	3rd groove from top
Main jet	#142
Float level	0.75 in (19.0 mm)
Identification number	PWK10A

All jetting is based on

- Standard Jetting
- 32:1 Fuel/Oil Ratio
- Unmodified Engine (Including Porting, Exhaust and Timing)

TEMPERATURE	FAHR.	–21 ~ 0°	–1 ~ 20°	19 ~ 40°	39 ~ 60°	59 ~ 80°	79 ~ 100°	99 ~ 120°
ALTITUDE	Cent	–30 ~ –17°	–18 ~ –6°	–7 ~ 5°	4 ~16°	15 ~ 27°	26 ~ 38°	37 ~ 49°
10,000 ft (3,050m) to 7,500 ft (2,300m)	AS: SJ: NC: JN: MJ:	2 45 3rd NBKF 142	2 45 3rd NFSF 142	2 1/4 45 2nd NBKF 140	2 1/2 45 2nd NBKG 138	2 3/4 45 2nd NFSG 135	3 45 2nd NFSG 132	3 42 1st NBKG 130
7,499 ft (2,299m) to 5,000 ft (1,500m)	AS: SJ: NC: JN: MJ:	1 3/4 45 3rd NBKF 145	2 45 3rd NBKF 142	2 45 3rd NFSF 142	2 1/4 45 2nd NBKF 140	2 1/2 45 2nd NBKG 138	2 3/4 45 2nd NFSG 135	3 45 2nd NFSG 132
4,999 ft (1,499m) to 2,500 ft (750m)	AS: SJ: NC: JN: MJ:	2 48 3rd NBKE 148	1 3/4 45 3rd NBKF 145	2 45 3rd NBKF 142	2 45 3rd NFSF 142	2 1/4 45 2nd NBKF 140	2 1/2 45 2nd NBKG 138	2 3/4 45 2nd NFSG 135
2,499 ft (749m) to 1,000 ft (300m)	AS: SJ: NC: JN: MJ:	1 3/4 48 4th NFSE 150	2 48 3rd NBKE 148	1 3/4 45 3rd NBKF 145	2 45 3rd NBKF 142	STANDARD SETTING 2 45 3rd NFSF 142	2 1/4 45 2nd NBKF 140	2 1/2 45 2nd NBKG 138
999 ft (299m) to Sea Level (0m)	AS: SJ: NC: JN: MJ:	1 1/2 48 4th NBKE 152	1 3/4 48 4th NFSE 150	2 48 3rd NBKE 148	1 3/4 45 3rd NBKF 145	2 45 3rd NBKF 142	2 45 3rd NFSF 142	2 1/4 45 2nd NBKF 140

Legend

AS: Air Screw opening from fully seated
SJ: Slow Jet
NC: Needle Clip position
JN: Jet Needle
MJ: Main Jet

Carburetor Adjustments & Tuning Tips

Adjustments for Altitude & Temperature

All jetting recommendations are based on standard jetting with an unmodified engine. The following conditions can affect the fuel mixture.

Condition	Mixture will be:	Adjust to:
cold temperature	lean	richer
warm temperature	rich	leaner
dry air	lean	richer
high humidity	rich	leaner
high altitude	rich	leaner

Special Tuning Conditions

There are some unique atmospheric conditions or situations that may require additional adjustments.

It should not be necessary to go more than one jet size richer or leaner to fine tune your CR. If larger jetting changes are necessary, check for air leaks, blocked or restricted exhaust or fuel systems, or a dirty air cleaner.

Condition	Main Jet Adjustment
long straights	next larger
uphill sections	
sand	
mud	
high humidity	next smaller
raining	
hotter than 113 °F (45 °C)	

Once you've adjusted the carburetor for temperature and altitude, it shouldn't need major readjustment unless race conditions change drastically. However, there are some unique atmospheric conditions or race day situations that may require additional adjustments. They are as follows.

To prevent engine damage, always adjust the main jet before adjusting the jet needle. Always choose the next richer jet if there is any doubt so there is a margin for safety.

Main Jet
- Go richer on the main jet, by one number, when: the track has a very long straightaway or uphill section, a high percentage of sand, or the track is muddy.
- Go leaner on the main jet, by one number, when: it is very humid or raining, or it is hotter than 113°F (45 °C).

After using the chart, and making any adjustments for special conditions, it shouldn't be necessary to go more than one jet size richer or leaner to fine tune your CR. If larger jetting changes are necessary, check for worn crankshaft seals, air leaks, blocked or restricted exhaust or fuel systems, or a dirty air cleaner.

Pre-Adjustment Checks

Before adjusting carburetor settings, check the following:
- air cleaner condition (page 40)
- air leaks
- ignition timing
- float level (page 93)
- clogged carburetor jets
- spark plug fouling (improper heat range or other cause)
- freshness of fuel and fuel/oil ratio

If the above check out, then, adjust the carburetor for your specific racing conditions. Engine response and appearance of the firing end of a spark plug are highly indicative of the engine condition.

Refer to the list on page 115 for the optional carburetor parts.

To prevent engine damage, always adjust the main jet before adjusting the jet needle. If there is any doubt — always choose the next richer jet so there is a margin for safety.

Carburetor Minor Adjustments

- The standard carburetor settings are ideal for the following conditions: 32-to-1 premix ratio using Pro Honda HP2 2-stroke Oil or its equivalent, sea level altitude, and 68 °F (20 °C) air temperature. If your conditions are different, you may need to adjust the carburetor settings, using the tuning information on pages 88-90. Confirm your settings are correct before proceeding.

Minor Adjustments

1. Adjust the carburetor setting using the tuning information on pages 88-90.
2. When the engine is warm enough to run without the choke, push the choke knob down to its off position.
3. Turn the throttle stop screw (1) to obtain the smoothest idle:
   – To decrease idle speed, turn the screw counterclockwise.
   – To increase idle speed, turn the screw clockwise.
4. Adjust the air screw (2) to obtain the best off-idle performance.
   – If the engine blubbers (rich) exiting a corner, turn the air screw counterclockwise to lean the mixture.
   – If the engine surges (lean) exiting a corner, turn the air screw clockwise to richen the mixture.

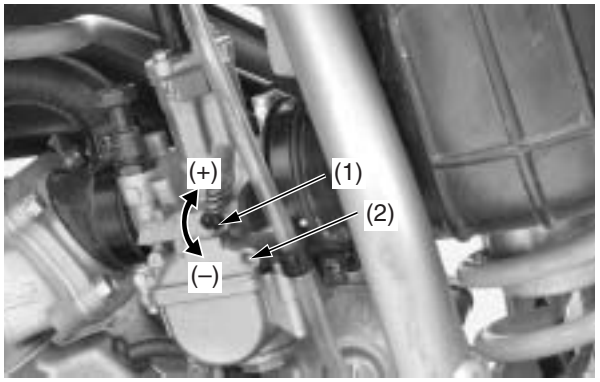

(1) throttle stop screw (+) increase
(2) air screw (–) decrease

The minimum to maximum range of air screw adjustments is $1^1/_2$ to 3 turns out from the lightly seated position. If you exceed 3 turns out, the next smallest slow jet is needed. If you are under $1^1/_2$ turn out, the next larger slow jet is needed.

Adjustment Procedure

1. Warm up the engine.
2. Make two or three laps of a course with the standard setting or corrected jetting (page 89) and spark plug. Note engine acceleration and other engine conditions in relation to throttle opening. Verify carburetion by removing the spark plug and reading its firing end (pages 46, 94). It may take more than two or three laps to get a good spark plug reading with a new spark plug.
3. Change carburetor settings or select suitable carburetor jets, taking into consideration the engine conditions and factors for temperature and altitude (page 89).

⚠ WARNING

Gasoline is highly flammable and explosive. You can be burned or seriously injured when handling fuel.

- Stop the engine and keep heat, sparks and flame away.
- Handle fuel only outdoors.
- Wipe up spills immediately.

4. If you've determined that the main and slow jets must be changed, you must remove the float bowl plug.
   Removing the float bowl plug will allow the fuel in the float bowl to drain. Do not remove the plug if the engine is hot.
5. Turn the fuel valve OFF, and disconnect the fuel line from the fuel valve.
6. Loosen the connecting and insulator tube clamp screws (1). Rotate the carburetor. Remove the float bowl plug (2).

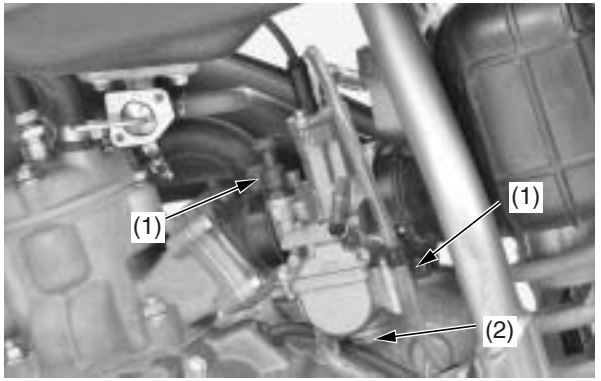

(1) connecting and insulator tube clamp screws
(2) float bowl plug

(cont'd)

7. Change the jets as required.

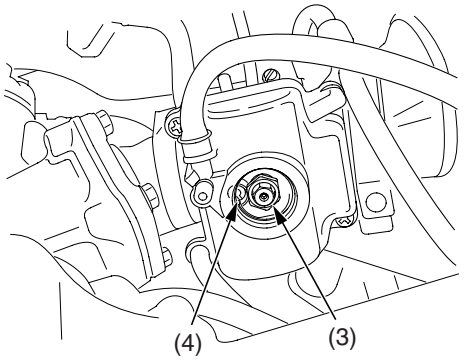

(3) main jet (4) slow jet

8. Reinstall the float bowl and its plug securely.
9. Remove the carburetor top, throttle valve and throttle cable (page 93), and then change the jet needle clip position as required.
10. Reinstall the jet needle, throttle valve, cable holder and carburetor top (page 93).
11. Turn the carburetor upright and tighten its clamp screws.
12. Adjust the air screw opening required. Reconnect the fuel line at the carburetor.
13. Repeat steps 2 through 11 until the engine gives maximum power with the correct spark plug reading. It is always better to jet a little rich than a little lean. It is advisable to record the settings, course conditions, lap times, and climatic and barometric conditions for future reference.

Carburetor Disassembly/Assembly

1. Turn the fuel valve off.
2. Disconnect the fuel line (1) from the carburetor.

⚠ WARNING

Gasoline is highly flammable and explosive. You can be burned or seriously injured when handling fuel.

- Stop the engine and keep heat, sparks and flame away.
- Handle fuel only outdoors.
- Wipe up spills immediately.

3. Loosen the insulator and connecting tube clamp screws (2).

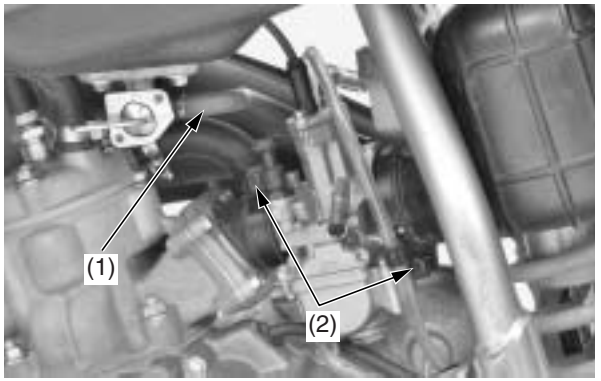

(1) fuel line
(2) insulator and connecting tube clamp screws

4. Remove the carburetor to the left side.
   Be careful not to damage around the throttle sensor.
   Do not assemble or move the carburetor while holding the throttle sensor lead.
5. Remove the screws (3) and carburetor top (4), then pull out the throttle valve.

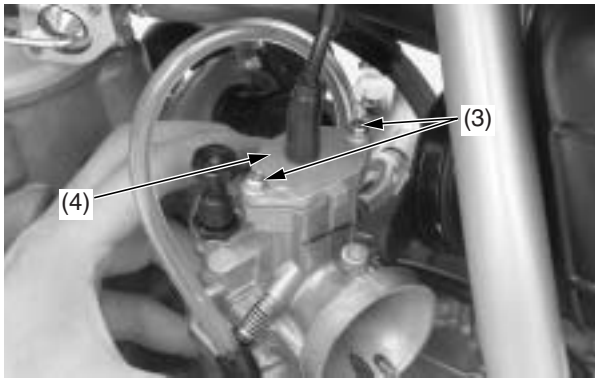

(3) screws
(4) carburetor top

6. Remove the throttle cable (5) and cable holder (6) from the throttle valve (7).
7. Remove the cable holder and throttle valve spring (8) from the throttle cable.
8. Remove the throttle cable holder and jet needle (9) from the throttle valve.

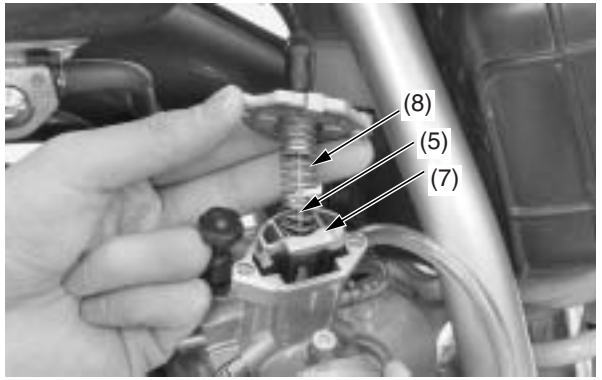

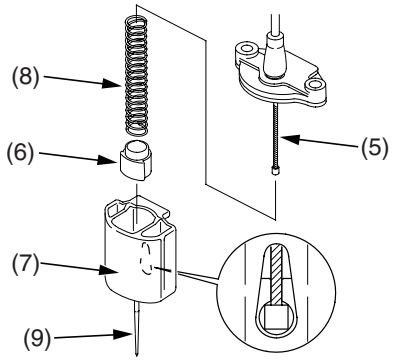

(5) throttle cable
(6) cable holder
(7) throttle valve
(8) throttle valve spring
(9) jet needle

9. Remove the float bowl screws (11) and float bowl (12).

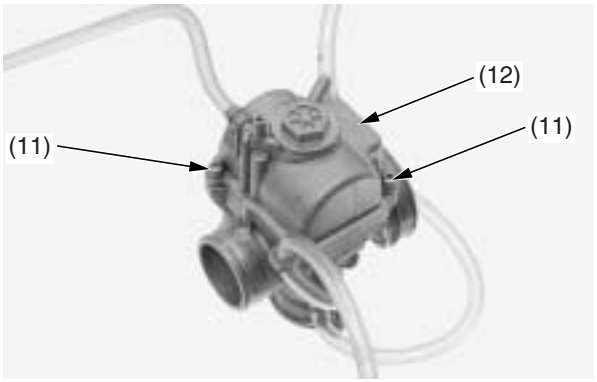

(11) float bowl screws
(12) float bowl

10. Use a float level gauge (13) to measure the float level (14) with the float tab just contacting the float valve and the carburetor intake (15) facing up. The float level should be 0.75 in (19.0 mm). Adjust the float level by bending the float tab carefully.

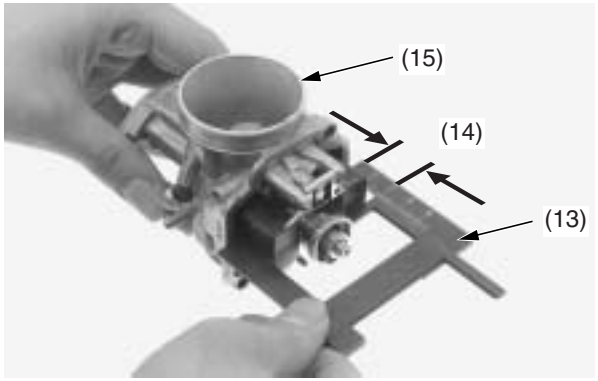

(13) float level gauge
(14) float level
(15) carburetor intake

11. To assemble, reverse the disassembly procedures.
12. To install the carburetor, reverse the removal procedures.

After installing the carburetor, check the air vent hoses (16) and overflow hose (17) for kinking or pinching and correct routing as necessary.

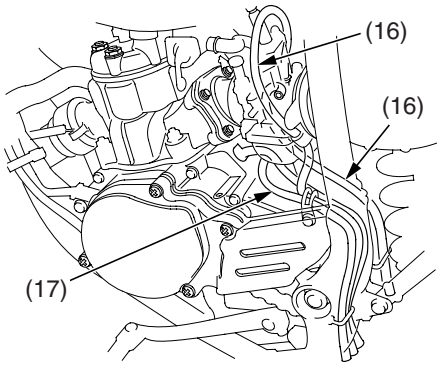

(16) air vent hoses
(17) overflow hose

Spark Plug Reading

Refer to *Spark Plug* on page 46.

Check any jetting change by reading the spark plug. The following procedure is recommended. You may not get an accurate reading if you simply turn off the engine and pull the plug for inspection.

Use a new spark plug. Inspect the plug before installing it.

NOTICE

Using spark plugs with an improper heat range or incorrect reach can cause engine damage.

Before removing the spark plug, clean the spark plug area thoroughly to prevent dirt from entering the cylinder.

Ride for 10 - 15 minutes before taking a plug reading. A new plug will not color immediately.

To obtain an accurate reading of a new spark plug:

1. Accelerate at full throttle on a straight
2. Push the engine stop button and pull the clutch lever in to release the clutch.
3. Coast to a stop.
4. Remove the spark plug.
5. Use a magnifying glass to inspect the spark plug. The porcelain insulator (1) around the center electrode (2) should appear clean and colorless with a gray ring around the center electrode where it exits the porcelain. Metallic specks indicate lean jetting that is removing metal from the piston. Black sooty streaks on the porcelain indicate rich jetting.

NOTICE

Improperly tightened spark plugs can damage the engine. If a plug is too loose, a piston may be damaged. If a plug is too tight, the threads may be damaged.

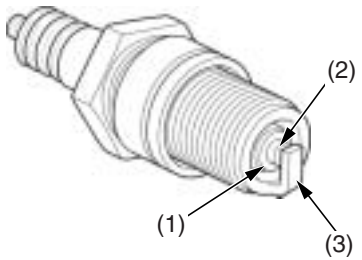

(1) insulator
(2) center electrode
(3) side electrode

Spark Plug Coloring Guidelines

Condition	Spark Plug Appearance	Mixture
Normal	Dark brown to light tan color with dry electrode	correct
Overheating (Lean)	Light gray or white color	lean
Wet (Rich)	Wet or sooty	rich

Remember that in addition to improper jetting:

- A lean condition can be caused by air leaks in the insulator tract, in the center crankcase joint and leaking ignition side crank seal. Insufficient oil on the air cleaner may also cause a lean condition.
- A rich condition may be caused by a leaking primary drive side seal — that draws transmission oil into the fuel/air mixture. Excessive smoking will occur. Failure to remove the air cleaner housing cover for dry conditions may also cause a rich condition.

  Pressure/vacuum testing your engine on a regular basis to detect air leaks is recommended. See your Honda dealer.

  The same simple throttle opening identification system used in the Break-in section of this manual can also be used to accurately identify where carburetion problems occur, should they arise (page 16).

Refer to *Safety Precautions* on page 19.

The following suggestions may improve a specific concern. Subtle changes in overall handling may also be noted.

Rear End

If you have a problem with rear wheel traction, raise the rear end of your CR by increasing the rear spring pre-load. Instead of running 3.3 in (85 mm) of sag, you can run 3.1 in (80 mm) or 3.0 in (75 mm) so the rear of the bike will sit a little higher. This should produce more traction because of the change to the swingarm and the location of your CR's center of gravity.

If you have a problem with the steering head shaking when you use the front brake hard or if your CR wants to turn too quickly, lower the rear of the motorcycle by reducing the rear spring pre-load. This will increase fork rake and trail and should improve stability in a straight line. The effective suspension travel will be transferred toward the firmer end of wheel travel.

Keep the race sag adjustment (page 82) in the 3.3 - 4.1 in (85 - 105 mm) range.

Fork Height/Angle

The position of the fork tubes in the clamps is adjustable.

Before making any chassis adjustments or measuring wheel base, make sure the fork tubes are set to their proper position.

Standard Position
Align the groove (1) in the outer tube with the top surface of the upper fork clamp (2).

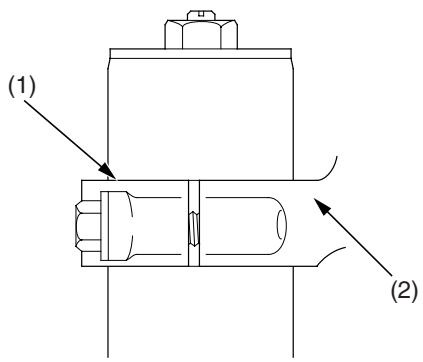

(1) groove (2) upper fork clamp

Wheelbase

Adjusting your CR's wheelbase can offer subtle changes in overall handling. You may adjust wheelbase by adding or removing links on the drive chain. If you change the wheelbase, be sure to recheck race sag and adjust, if necessary.

In the past, a general rule was lengthen the wheelbase to add straight line stability, shorten the wheelbase to improve turning. However, we suggest you do not lengthen the wheelbase of your CR unless you are racing on a track with more fast sections than normal.

As a general recommendation, keep the wheelbase as short as possible. This positions the wheels closer together, improves turning response, increases weighting (traction) on the rear wheel, and lightens weighting on the front wheel.

With your CR, you will probably find that the standard setting or a shorter wheelbase will offer more overall benefits.

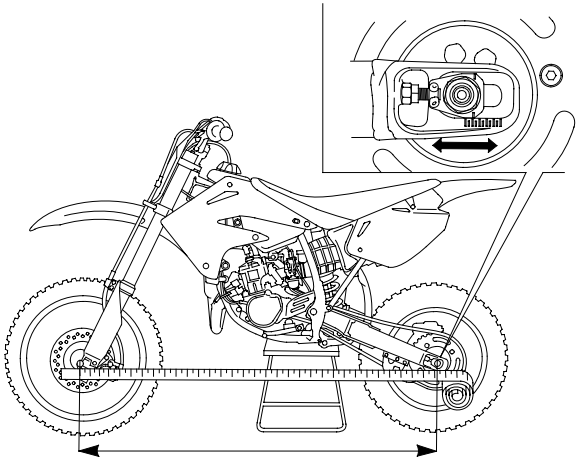

Gearing

Refer to *Safety Precautions* on page 19.

You can "adjust" the power delivery of the standard engine to suit track conditions by changing gearing. This allows you to utilize a different portion of the engine's power range at a given throttle setting. New gearing may provide the change you are looking for without the need to consider further modifications.

The portion of your engine's power range you use can be adjusted by changing the final drive ratio with different sized rear sprockets. Gearing changes allow you to more closely match the type of terrain and the available traction. Normally, a change of one tooth on the rear sprocket will be sufficient.

There is a choice of both higher and lower final drive ratios with two optional aluminum driven sprockets. For muddy or sandy courses, there is a more durable steel driven sprocket with the standard number of teeth. Like the optional seats and springs, these sprockets are listed in the Optional Parts List section of this manual.

Unless you have the required mechanical knowhow, tools, and an official Honda Service Manual, sprocket changing should be done by your Honda dealer.

Higher Gearing (more rear sprocket teeth)

- increases top speed in each gear (provided the engine will pull the higher gearing)
- reduces frequency of shifting (wider gear ratios)
- reduces engine rpm at a given throttle setting or ground speed (which may allow better rear wheel traction on slippery or loose terrain)

However:

- the engine may not pull the higher gearing
- the spacing between gears may be too wide
- engine rpm may be too low

Lower Gearing (more rear sprocket teeth)

- decrease top speed in each gear
- increases frequency of shifting (narrower gear ratios)
- increases engine rpm at a given throttle setting or ground speed (which may provide more power-to-the-ground on good traction surfaces)

However:

- spacing between gears may be too narrow
- engine rpm may be too high

Some tracks may be watered heavily prior to the first race, then lightly or not at all during the day. This results in a track surface that is slippery during the first few races, then changes from good to great and back to good and possibly ends the day with a slick rock-hard consistency. Ideally, your gearing should be adjusted to suit all these conditions.

- Wet and slippery or sandy conditions: use a higher gear (less teeth) to keep engine rpm down, and avoid unwanted wheelspin. The engine may bog in certain corners so you'll need to slip the clutch to compensate; downshifting may be too drastic a change in speed.
- Average conditions: use the standard sprocket.
- Hard (but not slippery) track conditions: use lower gearing (more teeth) to keep the engine rpm high where the engine produces the most power. This may require an extra upshift on certain sections or perhaps you can just rev it out a bit longer.

For tight tracks, consider lower gearing to avoid having to slip the clutch frequently. Repeated fanning or pulling of the clutch lever in a turn to raise engine rpm may eventually damage the clutch system.

A gearing change may help for riding in sand, where you want to keep the front end light so it can float from the peak of one sand whoop to the next. Generally, with higher gearing, it is easier to maintain that perfect attitude (maximum rear wheel traction and a light front end) because you remain in the powerband longer in each gear. The higher gearing allows you to steer more efficiently with throttle control and body English.

If you are riding a track with sections where you choose to over-rev the engine temporarily rather than shifting up, higher gearing might help.

Sometimes you have to sacrifice performance on one section of the track to gain a better overall time. Your goal is the fastest overall lap time, even if the cost is some sections where the gearing feels wrong.

If you decide to try a gearing change, have someone check your times with a stopwatch (before and after the change) to get an accurate appraisal of the change. "Seat-of-the-pants" feelings can't be trusted. Eliminating wheelspin with a gearing change can make you feel like you're going slower when, in reality, you've decreased your time by increasing your speed with better traction.

These gearing recommendations should be evaluated by considering your ability, your riding style, and the track.

Refer to *Safety Precautions* on page 19.

Choosing the correct tire tread pattern and rubber compound can affect your placing in competition. The tires on your CR offer a “happy medium” for the variety of soil conditions the majority of riders are likely to encounter.

Experienced competitors often switch to tires developed for specific terrain conditions. If you do switch, stay with the factory recommended sizes. Other tires may affect handling or acceleration.

Be aware that tire sizes (width and aspect ratio) do vary from manufacturer to manufacturer or even among tires made by the same manufacturer. Variations in tires, especially the sidewall profile, can change the attitude of your CR and its handling. Tire variations that raise or lower the rear of your CR have a more significant effect on handling than variations in front tires which, generally, don’t vary as much.
Often, you can see or feel the change in tire size. Another way to check is to measure the rolling circumference of the old and new tires. A higher profile tire will have a larger rolling circumference.

If you do switch to tires designed for special terrain use, remember they will be less acceptable in other circumstances. For example, an aggressive mud tire will give excellent grip on wet, loamy terrain, but less impressive grip on a hard surface.

If you choose a tire with a sticky compound for added traction, remember that it may transfer additional loads to the transmission because it grips so well, especially when riding in situations that normally place unusual demands on the transmission.

Complete consumer information can be obtained from the various tire manufacturer representatives and dealers.

Some general recommendations for specific terrain follow:

Hard, Slick Soil
Use tires with many relatively short knobs that are close together in order to obtain the largest possible contact patch on the surface. The rubber compound needs to be softer for hard ground in order to hook up, but not so soft that the knobs roll over easily and affect holding a straight line. These tires tend to wear more quickly than standard tires because of the combination of soft rubber and hard terrain.

Muddy Soil
Use a more open tread pattern to avoid clogging. For these conditions, the relatively long knobs will probably be made from a harder rubber compound to reduce any tendency to bend back under acceleration or wear quickly.

Loose, Sandy Soil
Use a tire that is similar in construction to those needed for tacky soil and mud, but with a few more knobs.

Personal Fit Adjustments

Refer to *Safety Precautions* on page 19.

The following suggestions may make your ride both more comfortable and more responsive to your control input.

Control Positioning

- Position the control levers so that you can use them comfortably when seated and standing.
- Adjust the control lever mounting bolt torque of the clutch and brake lever assemblies so that they can rotate on the handlebar in a fall. If an assembly does not rotate, it may bend or break a control lever. Make sure that the bolts are torqued securely enough to prevent slippage during normal operation.

Apply Pro Honda Hondalock or an equivalent to the threads of these bolts prior to adjustment to help ensure the correct torque is retained. Tighten the top bolts first.

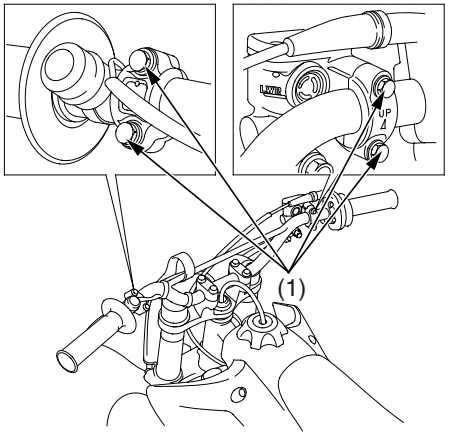

(1) control lever mounting bolts

As an alternative, consider wrapping the handlebar area under the control assemblies with teflon tape. Then tighten the assemblies to their normal torque. Upon impact, the fully-tightened assemblies should rotate on the Teflon tape.

- Position the shift lever and brake pedal so that they are close to your boot for rapid access, but not so close that either is depressed when sitting or standing comfortably on your CR.

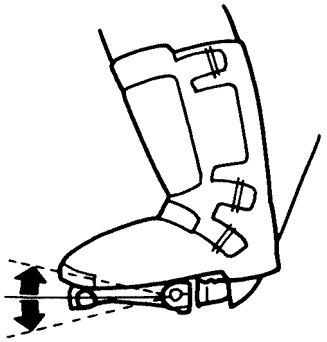

Handlebar Position, Width & Shape

- Position the handlebar so that both gripping the bar and operating the controls is comfortable while both seated and standing, while riding straight ahead and turning. Tighten the forward bolts first.
- Handlebar width can be trimmed with a hacksaw to better suit your particular shoulder width and riding preference. Think this through carefully and cut off just a small amount at a time from both sides equally. It is obviously much easier to make the handlebar narrower than it is to add material.

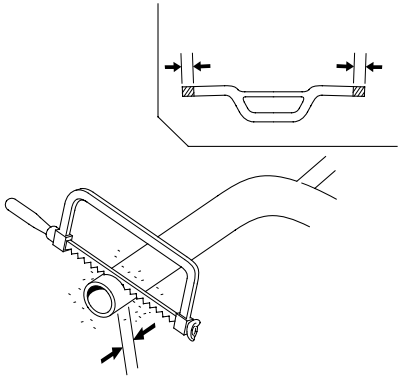

- Chamfer the edges to remove burrs and other irregularities or roughness after sawing the handlebar.
- An alternate handlebar shape, through varying rise or rearward sweep dimensions, will provide further adjustment to riding position and may better suit your particular body size or riding style. Each of the ergonomic dimensions of the machine were determined to suit the greatest possible number of riders based on an average size rider.

Tips

Here's helpful advice on how to transport and store your Honda, as well as two troubleshooting flow charts.

Transporting Your Motorcycle 100
Storing Your Honda.....101
You & the Environment 102
Troubleshooting.....103

Transporting Your Motorcycle

If you use a truck or motorcycle trailer to transport your Honda, we recommend that you follow these guidelines:

- Use a loading ramp.
- Make sure the fuel valve is off.
- Secure the motorcycle in an upright position, using motorcycle tie-down straps. Avoid using rope, which can loosen and allow the motorcycle to fall over.

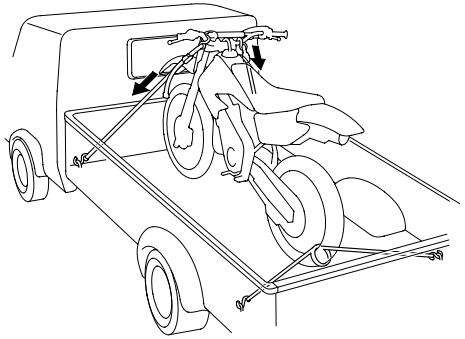

To secure your CR, brace the front wheel against the front of the truck bed or trailer rail. Attach the lower ends of two straps to the tie-down hooks on your vehicle. Attach the upper ends of the straps to the handlebar (one on the right side, the other on the left), close to the fork.

Check that the tie-down straps do not contact any control cables or electrical wiring.

Tighten both straps until the front suspension is compressed about half-way. Too much pressure is unnecessary and could damage the fork seals.

Use another tie-down strap to keep the rear of the motorcycle from moving.

We recommend that you do not transport your CR on its side. This can damage the motorcycle, and leaking gasoline could be a hazard.

If you won't be riding for an extended period, such as during the winter, thoroughly inspect your Honda and correct any problem before storing it. That way, needed repairs won't be forgotten and it will be easier to get your CR running again.

To reduce or prevent deterioration that can occur during storage, also follow the following procedures.

Preparation for Storage

1. Completely clean all parts of your CR. If your CR has been exposed to sea air or salt water, wash it down with fresh water and wipe dry.
2. Drain the fuel tank and carburetor into an approved gasoline container.
   Turn the fuel valve OFF and remove the carburetor drain bolt. Drain gasoline into an approved container. Reinstall the drain bolt.

⚠ WARNING

Gasoline is highly flammable and explosive. You can be burned or seriously injured when handling fuel.

- Stop the engine and keep heat, sparks and flame away.
- Handle fuel only outdoors.
- Wipe up spills immediately.

3. Remove the coolant drain bolts (1) from the cylinder (2) and water pump (3) to drain coolant.
   After the coolant has been completely drained, ensure that the drain bolt sealing washers are in good condition and reinstall the drain bolts.

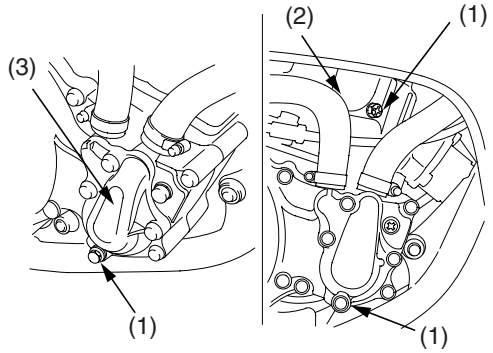

(1) drain bolts
(2) cylinder
(3) water pump

4. Lubricate the drive chain.
5. Remove the spark plug and pour a tablespoon (0.51 - 0.68 US oz; 15 - 20 cm^3) of clean 2-stroke engine oil into the cylinder. With the spark plug grounded or the engine stop button pressed in, operate the kickstarter several times to distribute the oil, then reinstall the spark plug.

NOTICE

When turning the engine over, the engine stop button should be pressed in, and the spark plug placed in its cable cap and grounded to prevent damage to the ignition system.

6. Inflate the tires to their recommended pressures.
7. Place your CR on the optional workstand or equivalent to raise both tires off the ground.
8. Stuff a rag into the silencer outlet. Then tie a plastic bag over the end of the muffler to prevent moisture from entering.
9. Store your CR in an unheated area, free of dampness, away from sunlight, with a minimum of daily temperature variation.
10. Cover your CR with a porous material. Avoid using plastic or similar non-breathing, coated materials that restrict air flow and allow heat and moisture to accumulate.

Removal from Storage

1. Uncover and clean your CR.
   Change the transmission oil if more than 4 months have passed since the start of storage.
2. Uncover the end of the muffler and remove the rag from the muffler outlet.
3. Fill the fuel tank with pre-mixed fuel (page 34).
4. Pour a fresh recommended coolant mixture (page 38) slowly into the radiator filler hole up to the filler neck.

   Capacity:
   0.45 US qt (0.43 ℓ)
   at disassembly
   0.45 US qt (0.43 ℓ)
   at draining

   Lean your CR slightly right and left several times to bleed trapped air in the cooling system.
   If the coolant level lowers, add coolant and repeat the above procedure.
   Install the radiator cap securely.
5. Perform all maintenance checks (page 9).

You & the Environment

Owning and riding a motorcycle can be enjoyable, but you must do your part to protect nature. When you show respect for the land, wildlife, and other people, you also help preserve the sport of off-road riding.

Following are tips on how you can be an environmentally-responsible motorcycle owner.

- **Choose Sensible Cleaners.** Use a biodegradable detergent when you wash your CR. Avoid aerosol spray cleaners that contain chlorofluorocarbons (CFCs) which damage the atmosphere's protective ozone layer. Don't throw cleaning solvents away; see the following guidelines for proper disposal.

- **Recycle Wastes.** It's illegal and thoughtless to put used engine oil in the trash, down a drain, or on the ground. Used oil, gasoline, and cleaning solvents contain poisons that can hurt refuse workers and contaminate our drinking water, lakes, rivers, and oceans.
  Before changing your oil, make sure you have the proper containers. Put oil and other toxic wastes in separate sealed containers and take them to a recycling center. Call your local or state office of public works or environmental services to find a recycling center in your area, and to get instructions on how to dispose of nonrecyclable wastes.

NOTICE

Improper disposal of drained fluids is harmful to the environment.

The items that are serviceable using this Manual are followed by the page number reference in parenthesis. The items that require use of the Honda Service Manual are followed by an asterisk (*).

Poor performance at low and idle speeds

CHECK		POSSIBLE CAUSES
1. Check ignition timing*	INCORRECT →	• Faulty ignition control module* • Faulty alternator* • Faulty ignition pulse generator
CORRECT ↓		
2. Check carburetor air screw adjustment (P. 91)	INCORRECT →	• Fuel-air mixture too lean (Turn the air screw in) (P. 91) • Fuel-air mixture too rich (Turn the air screw out) (P. 91)
CORRECT ↓		
3. Check if air cleaner is overoiled (P.40)	INCORRECT →	• Over-oiled air cleaner.
CORRECT ↓		
4. Check if the insulator is leaking*	LEAKING →	• Deteriorated reed valve gasket • Loose caburetor*
NOT LEAKING ↓		
5. Try spark test	WEAK OR INTERMITTENT SPARK →	• Faulty, carbon or wet fouled spark plug (P. 94) • Faulty ignition control module* • Faulty alternator* • Faulty ignition coil* • Broken or shorted spark plug wire
GOOD SPARK		

Poor performance at high speed

CHECK		POSSIBLE CAUSES
1. Check ignition timing*	INCORRECT →	• Faulty alternator* • Faulty ignition control module* • Faulty ignition pulse generator*
CORRECT ↓		
2. Disconnect fuel line at carburetor and check for clogging (P. 35)	FUEL FLOW RESTRICTED →	• Lack of fuel in tank (P. 35) • Clogged fuel line (P. 35) • Clogged fuel fill cap breather tube (P. 35) • Clogged fuel valve (P. 35) • Clogged fuel filter (P. 35)
UNRESTRICTED FUEL FLOW ↓		
3. Remove air cleaner (P. 40)	DIRTY →	• Not cleaned frequently enough (P. 40)
AIR FILTER NOT DIRTY ↓		
4. Check carburetor jets for clogging	CLOGGED →	• Contaminants in the fuel
NOT CLOGGED ↓		
5. Install a larger carburetor main jet (P. 89)	CONDITION WORSE →	• Jet size wrong, reject in the opposite direction (P. 89)

Technical Information

This section contains dimensions, capacities, and other technical data.

Vehicle Identification 106
Specifications 107
Torque Specifications 109
High Altitude Carburetor Adjustment 111
Oxygenated Fuels 112
Competition Logbook 113
Optional Parts List.....115
Spare Parts & Equipment 117
Wiring Diagram.....118

Serial Numbers

The VIN and engine serial numbers are required when you register your CR. They may also be required when ordering replacement parts. You may record these numbers in the Quick Reference section at the rear of the manual.

The VIN (1) is stamped on the right side of the steering head.

RIGHT SIDE

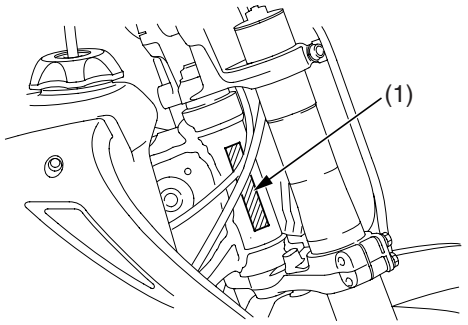

(1) VIN

The engine number (2) is stamped on the left crankcase.

LEFT SIDE

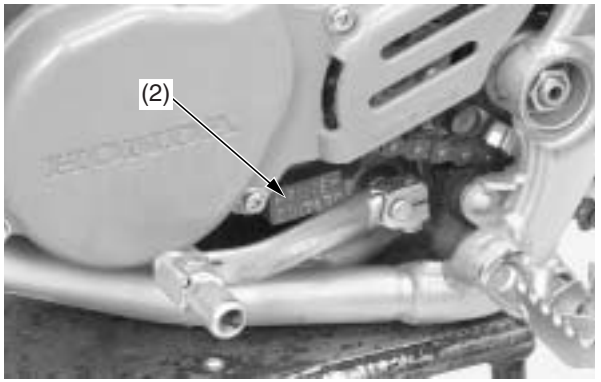

(2) engine number

CR85R

Item	English	Metric
Dimension		
Overall length	71.0 in	1,803 mm
Overall width	30.3 in	769 mm
Overall height	44.3 in	1,126 mm
Wheelbase	49.1 in	1,248 mm
Seat height	32.4 in	824 mm
Foot peg height	14.8 in	376 mm
Ground clearance	12.2 in	311 mm
Frame		
Type	Semi double cradle	
F. suspension	Telescopic fork, travel 9.6 in (245 mm) stroke 10.8 in (275 mm)	
R. suspension	Pro-link, travel 10.8 in (275 mm)	
Tire size, front	70/100-17 40M	
	DUNLOP	K490G
Tire size, rear	90/100-14 49M	
	DUNLOP	K695
Tire type	bias-ply, tube type	
Tire pressure, front (cold)	15 psi (100 kPa, 1.0 kgf/cm^2)	
Tire pressure, rear (cold)	15 psi (100 kPa, 1.0 kgf/cm^2)	
F. brake, swept area	Single disc brake 55.5 in^2 (358.1 cm^2)	
R. brake, swept area	Single disc brake 40.0 in^2 (257.8 cm^2)	
Fuel recommendation	unleaded gasoline, pump octane number of 91 or higher	
Fuel capacity	1.35 US gal	5.1 ℓ
Caster angle	26°51′	
Trail length	3.02 in	76.7 mm
Fork oil (per leg) level (Std.)	4.0 in	101 mm

Item	English	Metric
Engine		
Type	Liquid cooled, 2-stroke	
Cylinder arrangement	Single 15° inclined from vertical	
Bore and stroke	1.87 × 1.88 in	47.5 × 47.8 mm
Displacement	5.17 cu-in	84.7 cm^3
Compression ratio	8.45 : 1	
Transmission oil capacity		
After draining	0.58 US qt	0.55 ℓ
After disassembly	0.63 US qt	0.60 ℓ
Cooling system, capacity		
After draining	0.45 US qt	0.43 ℓ
After disassembly	0.45 US qt	0.43 ℓ
Carburetor		
Type	Piston valve	
Identification number	PWK10A	
Main jet (standard)	#142	
Slow jet (standard)	#45	
Air screw opening	2 turns out	
Float height	0.75 in	19.0 mm
Drive train		
Clutch type	Wet, multi-plate type	
Transmission	6-speed, constant mesh	
Primary reduction	4.117	
Gear ratio I	2.267	
Gear ratio II	1.722	
Gear ratio III	1.400	
Gear ratio IV	1.174	
Gear ratio V	1.042	
Gear ratio VI	0.920	

Item	English	Metric
Drive train		
Final reduction	3.267	
Gear shift pattern	Left foot-operated return system 1-N-2-3-4-5-6	
Electrical		
Ignition	ICM	
Starting system	Kickstarter	
Spark plug: Standard	NGK BR10EG	
Spark plug gap	0.02-0.03 in (0.6-0.7 mm)	

Specifications

CR85RB

Item		English	Metric
Dimension			
Overall length		74.1 in	1,881 mm
Overall width		30.3 in	769 mm
Overall height		46.1 in	1,170 mm
Wheelbase		50.7 in	1,289 mm
Seat height		34.0 in	864 mm
Foot peg height		16.4 in	417 mm
Ground clearance		13.9 in	353 mm
Frame			
Type		Semi double cradle	
F. suspension		Telescopic fork, travel 9.6 in (244 mm) stroke 10.8 in (275 mm)	
R. suspension		Pro-link, travel 11.5 in (292 mm)	
Tire size, front		70/100-19 42M	
		DUNLOP	K490
Tire size, rear		90/100-16 52M	
		DUNLOP	K695
Tire type		bias-ply, tube type	
Tire pressure, front (cold)		15 psi (100 kPa, 1.0 kgf/cm^2)	
Tire pressure, rear (cold)		15 psi (100 kPa, 1.0 kgf/cm^2)	
F. brake, swept area		Single disc brake 55.5 in^2 (358.1 cm^2)	
R. brake, swept area		Single disc brake 40.0 in^2 (257.8 cm^2)	
Fuel recommendation		unleaded gasoline, pump octane number of 91 or higher	
Fuel capacity		1.35 US gal	5.1 ℓ
Caster angle		27°25′	
Trail length		3.63 in	92.3 mm
Fork oil (per leg)	level (Std.)	4.0 in	102 mm

Item	English	Metric
Engine		
Type	Liquid cooled, 2-stroke	
Cylinder arrangement	Single 15° inclined from vertical	
Bore and stroke	1.87 × 1.88 in	47.5 × 47.8 mm
Displacement	5.17 cu-in	84.7 cm^3
Compression ratio	8.45 : 1	
Transmission oil capacity		
After draining	0.58 US qt	0.55 ℓ
After disassembly	0.63 US qt	0.60 ℓ
Cooling system, capacity		
After draining	0.45 US qt	0.43 ℓ
After disassembly	0.45 US qt	0.43 ℓ
Carburetor		
Type	Piston valve	
Identification number	PWK10A	
Main jet (standard)	#142	
Slow jet (standard)	#45	
Air screw opening	2 turns out	
Float height	0.75 in	19.0 mm
Drive train		
Clutch type	Wet, multi-plate type	
Transmission	6-speed, constant mesh	
Primary reduction	4.117	
Gear ratio I	2.267	
Gear ratio II	1.722	
Gear ratio III	1.400	
Gear ratio IV	1.174	
Gear ratio V	1.042	
Gear ratio VI	0.920	

Item	English	Metric
Drive train		
Final reduction	3.667	
Gear shift pattern	Left foot-operated return system 1-N-2-3-4-5-6	
Electrical		
Ignition	ICM	
Starting system	Kickstarter	
Spark plug: Standard	NGK BR10EG	
Spark plug gap	0.02-0.03 in (0.6-0.7 mm)	

Nuts, Bolts, Fasteners

Check and tigthen nuts, bolts, fasteners before every outing.

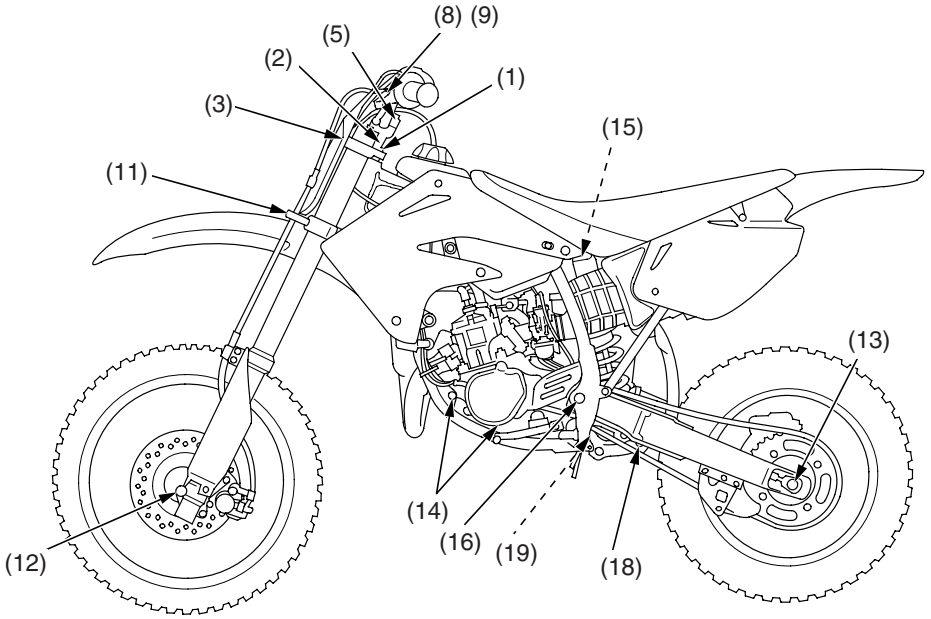

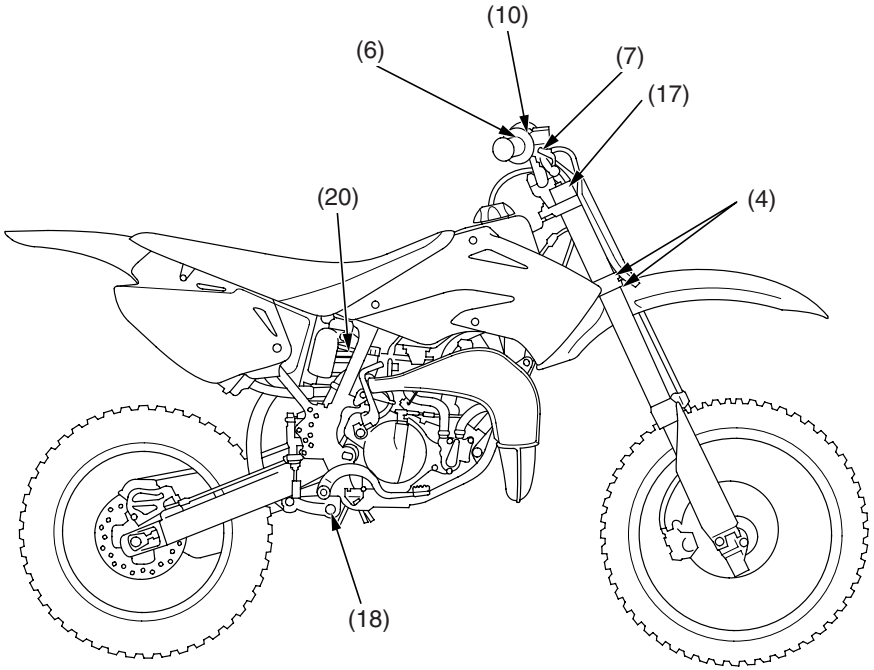

	Item	Torque			Remarks
		lbf·ft	N·m	kgf·m	
	FRAME				
1	Steering stem nut	94	128	13.1	
2	Top thread nut	4.4	5.9	0.6	
3	Fork bridge upper pinch bolts	16	22	2.2	
4	Fork bridge lower pinch bolts	16	22	2.2	
5	Handlebar upper holders	16	22	2.2	
6	Throttle holder	7	10	1.0	
7	Brake lever pivot	4.4	5.9	0.6	
8	Clutch lever pivot bolt	0.7	1	0.1	
9	Clutch lever pivot nut	4.4	5.9	0.6	
10	Front brake master cylinder holder	9	12	1.2	
11	Brake hose guide bolt	3.8	5.2	0.5	
12	Front axle nut	46	62	6.3	NOTE 4
13	Rear axle nut	65	88	9.0	NOTE 4
14	Engine hanger bolts	24	32	3.3	
15	Shock absorber (upper)	32	44	4.5	NOTE 4
	(lower)	32	44	4.5	
16	Swingarm pivot nut	58	78	8.0	
17	Fork cap	25	34	3.5	
18	Rear shock arm (swingarm side)	44	59	6.0	NOTE 4
	(shock link side)	44	59	6.0	NOTE 4
19	Rear shock link nuts (Frame side)	44	59	6.0	NOTE 4
20	Shock spring lock nut	65	88	9.0	

NOTES:
1. Apply Pro Honda Hondalock or an equivalent to the threads.
2. Apply oil to the threads and flange surface.
3. Stake.
4. U-nut.
5. UBS nut.
6. SH bolt.
7. Alock bolt.

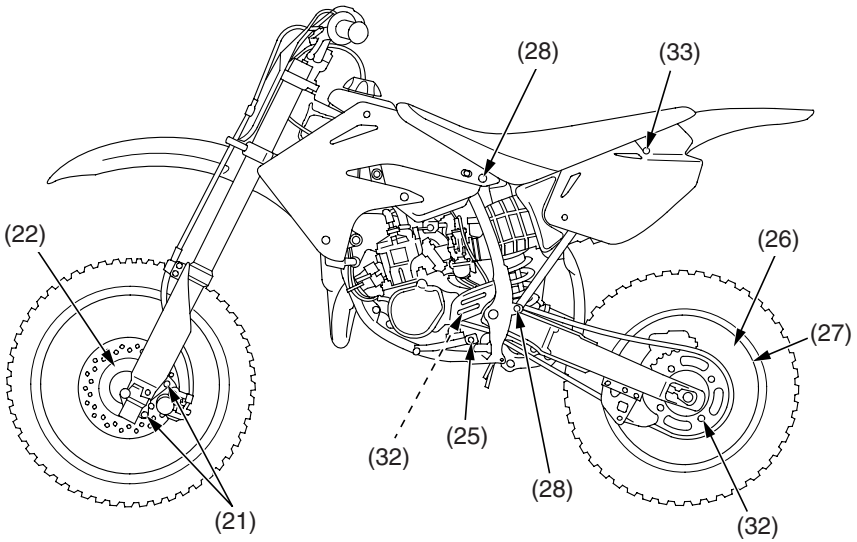

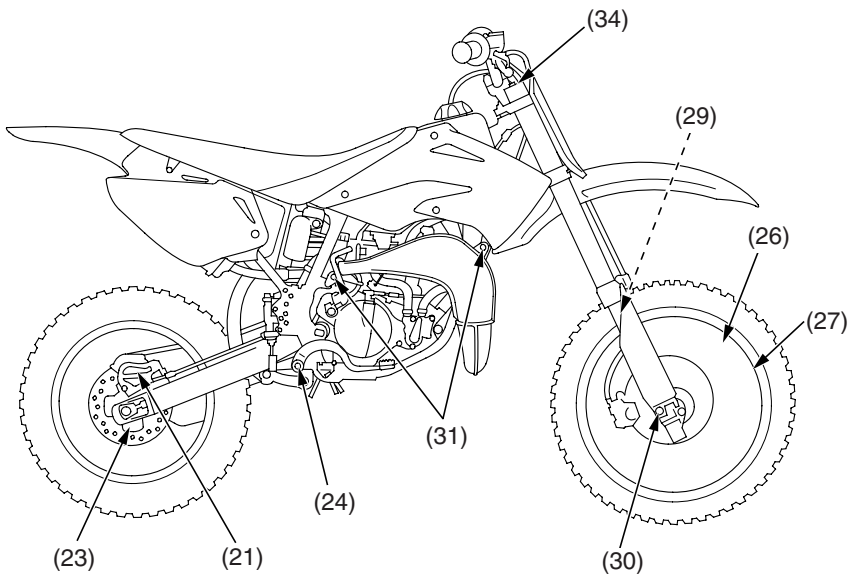

	Item	Torque			Remarks
		lbf·ft	N·m	kgf·m	
	FRAME				
21	Caliper mount bolts				
	Front	22	30	3.1	NOTE 1
	Rear	11	15	1.5	
22	Front brake disc nuts	15	20	2.0	NOTE 4
23	Rear brake disc nuts	15	20	2.0	NOTE 4
24	Brake pedal pivot bolt	24	32	3.3	
25	Shift lever	12	16	1.6	
26	Spokes	2.7	3.7	0.4	
27	Rim locks	9	12.4	1.3	
28	Subframe bolt (upper)	16	22	2.2	
	(lower)	16	22	2.2	
29	Fork piston rod lock nut	15	19.7	2.0	
30	Fork protector bolts	5.2	7	0.7	NOTE 1
31	Expansion chamber mounting bolt (front)	6.5	8.8	0.9	
	(rear)	6.5	8.8	0.9	
32	Sprocket nuts				
	Drive	10	13	1.3	
	Driven	24	32	3.3	NOTE 4
33	Seat mounting bolts	19	26	2.7	
34	Pressure release screw	1.0	1.3	0.1	

NOTES:
1. Apply Pro Honda Hondalock or an equivalent to the threads.
2. Apply oil to the threads and flange surface.
3. Stake.
4. U-nut.
5. UBS nut.
6. SH bolt.
7. Alock bolt.

High Altitude Carburetor Adjustment

When operating this motorcycle at high altitude, the air-fuel mixture becomes overly rich.

Above 6,500 feet (2,000 m), driveability and performance may be reduced and fuel consumption increased. The carburetor can be modified to compensate for this high altitude richness.

However, the carburetor must be returned to standard factory specifications when lower altitude riding is desired. See your Honda dealer for high altitude modification.

NOTICE

Sustained operation at altitudes below 5,000 feet (1,500 m) with high altitude carburetor modifications may cause engine overheating and damage.

Oxygenated Fuels

Some 1an ether compound. These gasolines are collectively referred to as oxygenated fuels. To meet clean air standards, some areas of the United States and Canada use oxygenated fuels to help reduce emissions.

If you use an oxygenated fuel, be sure it is unleaded and meets the minimum octane rating requirement.

Before using an oxygenated fuel, try to confirm the fuel's contents. Some states/provinces require this information to be posted on the pump.

The following are the EPA-approved percentages of oxygenates:

ETHANOL (ethyl or grain alcohol) 10% by Volume
You may use gasoline containing up to 10% ethanol by volume. Gasoline containing ethanol may be marketed under the name "Gasohol".

MTBE (Methyl Tertiary Butyl Ether) 15% by Volume
You may use gasoline containing up to 15% MTBE by volume.

METHANOL (methyl or wood alcohol) 5% by Volume
You may use gasoline containing methanol containing up to 5% methanol by volume as long as it contains cosolvents and corrosion inhibitors to protect the fuel system. Gasoline containing more than 5% methanol by volume may cause starting and/or performance problems. It may also damage metal, rubber, and plastic parts of your fuel system.

If you notice any undesirable operating symptoms, try another service station or switch to another brand of gasoline.

Fuel system damage or performance problems resulting from the use of an oxygenated fuel containing more than the percentages of oxygenates mentioned above are not covered under warranty.

Oxygenated fuels can damage paint and plastic. Be careful not to spill fuel when filling the fuel tank. Wipe up any spills immediately.

NOTICE

Oxygenated fuels can damage paint and plastic.

Any serious competition effort relies heavily on the knowledge gained and compiled from previous racing events. The best way to organize the many bits of information is to record them in a logbook.

Your logbook can include such information as suspension adjustments, carburetor adjustments, gearing, and tire selection. This detailed information, along with your comments, can prove valuable when you compete at the same track or on similar terrain.

Your logbook can also tell you when maintenance was performed and when it will be necessary again. Your logbook also lets you record any repairs and lets you keep track of the running time on the engine and suspension components.

If you choose to sell your CR, the accurate maintenance records in your logbook might be the deciding deal-maker for a potential buyer.

Consider using different color pens or pencils to record important information on specific subjects. For example, record results in black, jetting changes in red, suspension/chassis settings in blue, and gearing selections in green. Color codes will help you identify the information you want with a glance.

Tuning & Adjustment Records
Keep track of the settings and adjustments that worked best at a particular location. These items include:
- basic track conditions, altitude, and temperature
- carburetion changes
- suspension settings
- chassis adjustments tested and selected
- gearing
- tire selection
- air pressure

Competition Records
- your placings
- thoughts to improve performance next time: both yours and your CR's
- strategy notes

Maintenance Records
- regular interval maintenance
- repairs
- running time on engine
- running time on suspension components

Timekeeping
This Manual lists maintenance intervals for every-so-many races or every-so-many hours of running.

Because all races are not the same, the most effective way to schedule maintenance is by the hours you have run your CR.

An official "guestimate" is close enough for our timekeeping purposes. You may choose to record your time the same way aircraft operators do (but without the benefit of an electrical hourmeter). All running time is broken down into hours and tenths of an hour (each six minutes represents one tenth of an hour).

Racing Records
Information worth recording for this section of your logbook may include:
- Your placing in each moto and overall finishing position.
- Thoughts on what you could do to improve your performance next time.
- Notes on any patterns noted in choice of starting gate positions or in riding portions of the course as the day progressed that may prove helpful in future events.
- Any places on the course where you chose the wrong line and were passed too easily.
- Notes on strategy used by your competition or by riders in another event that are worth remembering.

Maintenance Records
Regular maintenance items you'll want to record in your logbook should include:
- Dates and results of cylinder, piston and ring examinations.
- Patterns for frequency of need for decarbonization with a particular oil.
- When you last performed shock linkage and swingarm pivot bearing maintenance.
- Transmission, fork and shock oil changes.
- Chain, sprocket, chain guide and slider replacements.
- Coolant changes and related component replacements.
- Spark plug, brake pad and control cable replacements.

In addition, you should record any irregularities noted in component wear so you'll remember to keep a close eye on these areas in the future.

Competition Logbook

Date	Running Time	Location/Event	Comments (Jetting, Suspension Settings, Gearing, Chassis Adjustments, Maintenance Performed, etc.)

(Make several photocopies of this page for future use)

These parts and tools may be ordered from your authorized Honda dealer.

CARBURETOR	Remarks	
Main jet (Standard: #142)	#130 - #155 (in increments of 2 or 3) (11 sizes) 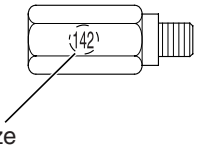	
Slow jet (Standard: #45)	#40 - 50 (in increments of 2 or 3)	
Jet Needles Standard needle: NFSF Straight diameter: ø2.415 mm 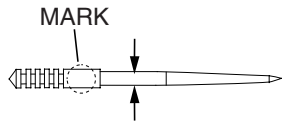		
Specific flow characteristics at 1/16 to 1/4 throttle	Jet needle number (standard series)	Jet needle number (1/2 clip position richer than standard at 1/8 to 3/4 throttle)
Rich ↑	NFSE ø2.405	NBKE ø2.405
	(standard needle) NFSF ø2.415	NBKF ø2.415
↓ Lean	NFSG ø2.425	NBKG ø2.425

FRAME		REMARKS
Driven sprocket	CR85R	< >: Drive chain links 48T, Aluminum <116> 49T, Aluminum <116> (Standard) 50T, Aluminum <116>
	CR85RB	< >: Drive chain links 54T, Aluminum <124> 55T, Aluminum <124> (Standard) 56T, Aluminum <124>
Drive chain	Standard	RK420MSZ1: 116 Links (CR85R) 124 Links (CR85RB)
	Optinal	RK420MSZ1: 130 Links

FRAME		REMARKS
Shock springs	**CR85R**	
	Softer	4.6 kgf/mm ← Brown mark
↑		4.8 kgf/mm ← Red mark
	Standard	5.0 kgf/mm ← White mark
↓		5.2 kgf/mm ← No mark
	Stiffer	5.4 kgf/mm ← Black mark

Rider Weight

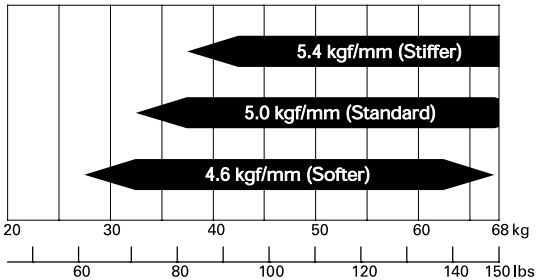

The maximum load capacity is 150 lbs. Rider weight must not exceed this limit.

Optional Parts List

FRAME		REMARKS
Shock springs	**CR85RB**	
	Softer	4.8 kgf/mm ← Red mark
	↑	5.0 kgf/mm ← White mark
	Standard	5.2 kgf/mm ← No mark
	↓	5.4 kgf/mm ← Black mark
	Stiffer	5.6 kgf/mm ← Blue mark

Rider Weight

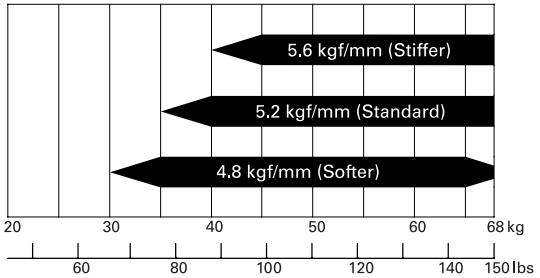

The maximum load capacity is 150 lbs. Rider weight must not exceed this limit.

FRAME		REMARKS
Fork springs	**CR85R**	
	Softer	0.26 kgf/mm ← 2-coils at both ends
	Standard	0.28 kgf/mm ← 1-coil at both ends
	Stiffer	0.30 kgf/mm ← 2-coils at one end; 1-coil at other end
	CR85RB	
	Softer	0.26 kgf/mm ← 2-coils at both ends
	Standard	0.28 kgf/mm ← 1-coils at both ends
	Stiffer	0.30 kgf/mm ← 2-coils at one end; 1-coils at other end

TOOLS	REMARKS
Workstand	For maintenance
Air gauge	For checking tire air pressure.
Pin spanner	To adjust spring preload (two spanners required)

There are numerous spare parts you can take to an event to help ensure you get in a full day of riding. In addition to the usual nuts and bolts, consider the following:

Spare Parts

spark plugs
air cleaner (clean & oiled, sealed in a plastic bag)
optional carburetor jets/needles
chain & masterlinks
chain guide slider
chain roller
inner tubes (front & rear)
fenders
footpegs
front & side number plates
handlebar
grips
levers (brake & clutch)
clutch lever handlebar mount
clutch cable
throttle assembly
throttle cable
shift lever
brake pedal
spokes (front & rear, each side)
driven sprockets (larger & smaller than standard, for gearing changes & collision damage replacement)
assorted nuts, bolts, washers, screws, cotter pins

Additional Spares
front brake master cylinder
rear brake assembly
front & rear brake hoses
wheels & tires (front & rear, mounted)
clutch plates & transmission oil
seat
ignition components
top end-complete
radiator hoses
radiator shrouds (L & R)
brake hoses (front & rear)

General Tools

sockets (3/8 in drive)
screwdrivers: blade & Phillips No. 1, 2, 3
wrench, large adjustable
wrenches: open end & box
wrenches: hex (Allen)
wrench, spoke
torque wrench (metric scale, click-stop style)
pliers: standard, needle-nose, channel-lock set
hammer, plastic head
syringe with adjustable stop
tire pressure gauge
tire irons
tire pump or air tank
feeler gauge set
Vernier caliper (metric)
pressure/vacuum testing equipment (USA only)

Honda Special Tools

Any special tools for your CR purchased from your Honda dealer.
flywheel puller 07733-0010000

Chemical Products

Pro Honda GN4 4-stroke Oil (Transmission Oil)
Pro Honda HP Fork Oil 5W
Pro Honda HP2 2-stroke Oil
Pro Honda DOT4 Brake Fluid
Pro Honda Chain Lube
Pro Honda Foam Filter Oil
Honda Contact Cleaner
Pro Honda Dielectric Grease
Pro Honda Handgrip Cement
Pro Honda Hondalock
Pro Honda Moly 60 Paste (U.S.A. only) or molybdenum disulfide paste (containing more than 40% molybdenum disulfide additive)
Pro Honda White Lithium Grease
Wheel Bearing Grease
Silicone Sealer
high-temperature grease
Pro Honda HP coolant
Pro Honda Hondabrite
Urea based multi-purpose grease designed for high temperature, high pressure performance (example: EXELITE EP2 manufactured by KYODO YUSHI, Japan or Shell stamina Ep2 or equivalent)

Other Products

safety wire
mechanic's wire
duct tape
plastic tie-wraps
hose clamps
drop light

Wiring Diagram

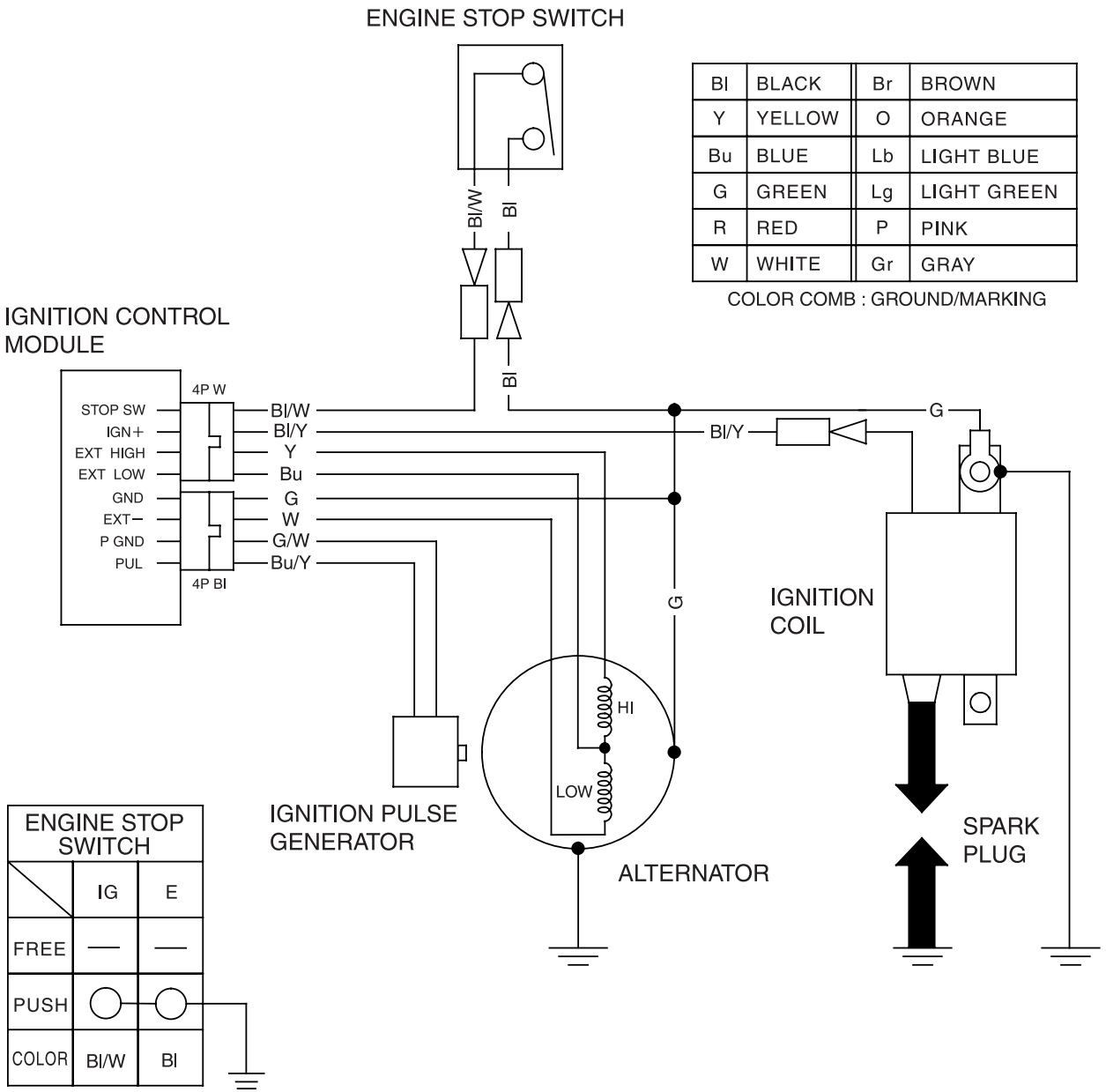

Bl	BLACK	Br	BROWN
Y	YELLOW	O	ORANGE
Bu	BLUE	Lb	LIGHT BLUE
G	GREEN	Lg	LIGHT GREEN
R	RED	P	PINK
W	WHITE	Gr	GRAY

COLOR COMB : GROUND/MARKING

Consumer Information

This section contains information about contacting Honda and how to get an official Honda service manual.

Authorized Manuals 120
Contacting Honda.....121
Your Honda Dealer.....122
The Honda Rider's Club
(USA only) 123

Authorized Manuals

The Service Manual used by your authorized Honda dealer is available from Helm, Inc.

Also available but not necessary to service your model is the Honda Common Service Manual which explains theory of operation and basic service information for various systems common to all Honda motorcycles, motor scooters and ATVs.

These Honda manuals are written for the professional technician, but most mechanically-capable owners should find them helpful if they have the proper tools and skills. Special Honda tools are necessary for some procedures.

Publication Item No.	Description	Price Each*
61GBF12	2007 CR85R/RB Service Manual	$38.00
61CM002	Common Manual	$48.00
31GBF740	2007 CR85R/RB EXPERT Owner's Manual	$16.00
Prices are subject to change without notice and without incurring obligation.		

Order On-Line: www.helminc.com

Order Toll Free: 1-888-CYCLE93 (1-888-292-5393)

(NOTE: For Credit Card Orders Only)

Monday - Friday 8:00 AM - 6:00 PM EST

OR

By completing this form you can order the materials desired. You can pay by check or money order, or charge to your credit card. Mail to Helm, Incorporated, at the address shown on this order form.
Canada: See your Honda dealer to order authorized manuals.

Publication Item No.	Item Description	Qty.	Price Each*	Total Price
*Prices are subject to change without notice and without incurring obligation.		Sub Total		
		Purchaser's Sales Tax Mich. Add 6% Calif. Add 8.25%		
Orders are mailed within 10 days. Please allow adequate time for delivery.		Handling Charge		$5.00
		Grand Total		

SHIP TO

NOTE: Dealers and Companies, please provide dealer or company name, and also the name of the person to whose attention the shipment should be sent. For purchases outside U.S.A., please write to the address shown below for a quotation.

Customer Name _____

Attention _____

Street Address-No P.O. Box Number _____ Apt. # _____

City _____ State ____ Zip Code _____

Daytime Telephone Number ( ) _____

PAYMENT

☐ Check or money order enclosed payable to Helm, Inc. U.S. funds only. Do not send cash.

☐ Master Card ☐ VISA ☐ Discover ☐ Check here if your billing address is different from the shipping address shown above.

Account Number

☐☐☐☐ ☐☐☐☐ ☐☐☐☐ ☐☐☐☐

Expiration Date: Mo. Yr

☐ — ☐

Customer Signature _____ Date _____

These Publications cannot be returned for credit without receiving advance authorization within 14 days of delivery. On returns, a restocking fee may be applied against the original order.

HELM P.O. BOX 07280, DETROIT, MICHIGAN 48207

Your owner's manual was written to cover most of the questions you might ask about your Honda. Any questions not answered in the owner's manual can be answered by your Honda dealer. If he doesn't have the answer right away, he will get it for you.

If you have a difference of opinion with your dealer, please remember that each dealership is independently owned and operated. That's why it's important to work to resolve any differences at the dealership level.

If you wish to comment on your experiences with your Honda or with your dealer, please send your comments to the following address (USA only):

Motorcycle Division, American Honda Motor Co., Inc., P.O. Box 2220, Torrance CA 90509-2220, mailstop: 100-4C-7B,
telephone: (866) 784-1870.

Canada: Refer to the warranty booklet that was supplied with your vehicle.

Please include the following information in your letter:

- name, address, and telephone number
- product model, year, and VIN
- date of purchase
- dealer name and address

We will likely ask your Honda dealer to respond, or possibly acknowledge your comments directly.

Your Honda Dealer

Once you purchase your new Honda, get familiar with the organization of your Honda dealer so you can utilize the full range of services available.

The service department is there to perform regular maintenance and unexpected repairs. It has the latest available service information from Honda.

The parts department offers Genuine Honda parts, Pro Honda products, Hondaline accessories (USA only), and Honda accessories and products (Canada only). The same quality that went into your Honda can be found in Genuine Honda replacement parts. You'll also find comparable quality in the accessories and products available from the parts department.

Your dealer can inform you about competition events in your area. You'll also find that your dealer is a source of information (USA only) the Honda Rider's Club of America.

We're sure you'll be as pleased with the service your Honda dealer continues to provide after the sale as you are with the quality and dependability of your Honda.

The Honda Rider's Club (USA only)

One of the best ways to get the most enjoyment from owning and riding your Honda is through the Honda Rider's Club of America. Your purchase of a new motorcycle, scooter, ATV or PWC from a participating U.S. Honda dealer entitles you to a complimentary one-year membership in the Club. There are hundreds of HRCA Chapter-sponsoring dealers across the USA with events and activities almost every weekend.

Membership benefits include:

- 24-hour, toll-free roadside assistance for your new Honda (includes roadside assistance for your transport vehicle [up to one ton] as long as your Honda is aboard or in tow). *For street-legal motorcycles and scooters only.*
- An exclusive HRCA website complete with access to the official Honda Common Service Manual, contests, insider information and more.
- Reimbursement (up to $75) for successful completion of a Motorcycle Safety Foundation training course. Separate, complimentary training from the Specialty Vehicle Institute of America for purchasers of new ATVs.
- One full year of *Honda Red Rider magazine* (six issues).
- Discounts from HRCA partners for experienced rider courses.
- Discounted vehicle insurance from the HRCA's insurance partner.
- Racing contingency programs and assistance at selected dual-sport, off-road, and motocross events for off-road motorcycles and selected ATVs.

If you purchased an off-road motorcycle, ATV or PWC, your benefits do not include roadside assistance or trip interruption protection.

Contact your Honda dealer for more information or call: 1-800-847-4722 or log on to www.hrca.honda.com

Table of Contents

The following presents the contents for each section of your owner's manual.

MOTORCYCLE SAFETY 1
Important Safety Information.....2
Important Safety Precautions.....2
Important Message to Parents.....2
Accessories & Modifications 3
Safety Labels 4

OPERATING CONTROLS.....5
Operation Component Locations 6

BEFORE RIDING.....7
Are You Ready to Ride?.....8
Is Your Motorcycle Ready to Ride? 9
Pre-ride Inspection.....9

BASIC OPERATING INSTRUCTIONS.....11
Safe Riding Precautions.....12
Starting & Stopping the Engine 13
Preparation 13
Starting Procedure 13
Flooded Engine.....13
How to Stop the Engine.....14
Shifting Gears.....15
Break-in Guidelines 16

SERVICING YOUR HONDA 17
Before You Service Your Honda
The Importance of Maintenance 18
Maintenance Safety 19
Important Safety Precautions.....19
Maintenance Schedule 20
General Competition Maintenance 22
Before & After Competition Maintenance.....26
Between Motos & Practice Maintenance 26
After Competition Maintenance 27

Service Preparations
Maintenance Component Locations.....28
Seat Removal.....29
Fuel Tank Removal 30
Subframe Removal 32

Service Procedures
Fluid & Filters
Fuel System 34
Transmission Oil 36
Coolant 38
Air Cleaner 40

Engine
Throttle 42
Clutch System 44
Spark Plug 46
Cylinder System 47

Chassis
Suspension.....52
Brakes 57
Wheels 61
Tires & Tubes 62
Drive Chain 64
Expansion Chamber 67
Additional Maintenance Procedures 68

Appearance Care 69

ADJUSTMENTS FOR COMPETITION 71
Front Suspension Adjustments.....72
Rear Suspension Adjustments 80
Suspension Adjustments for Track Conditions ..84
Suspension Adjustment Guidelines.....85
Carburetor Adjustments & Tuning Tips 88
Chassis Adjustments.....95
Gearing 96
Tire Selection for Track Conditions.....97
Personal Fit Adjustments 98

TIPS 99
Transporting Your Motorcycle 100
Storing Your Honda.....101
You & the Environment 102
Troubleshooting.....103

TECHNICAL INFORMATION 105
Vehicle Identification 106
Specifications 107
Torque Specifications 109
High Altitude Carburetor Adjustment 111
Oxygenated Fuels 112
Competition Logbook 113
Optional Parts List.....115
Spare Parts & Equipment 117
Wiring Diagram.....118

CONSUMER INFORMATION 119
Authorized Manuals 120
Contacting Honda.....121
Your Honda Dealer.....122
The Honda Rider's Club (USA only) 123

TABLE OF CONTENTS 124

INDEX 126

QUUICK REFERENCE

Index

A

accessories 3
adjustments,
  altitude and temperature 90
  carburetor 88
  chassis 95
  control freeplay 42,44,57
  for competition 71
  gearing 96
  high altitude carburetor 111
  personal fit 98
  suspension, front 72
  suspension, rear 80
  suspension, track conditions 84
  tire selection 97
after competition maintenance 26
air cleaner 40
air pressure,
  front suspension 72
  tires 62
American Honda, contacting 121
appearance care 69
authorized manuals 120

B

basic operation 11
before riding 7
between motos & practice maintenance 26
brakes,
  fluid level 58
  lever, front adjustment 57
  pad wear 60
  pedal height 57
break-in guidelines 16

C

capacity, fuel 35
carburetor,
  adjustment 88
  circuit functions 88
  components 88
  disassembly/assembly 92
  high altitude adjustment 111
  idle speed 91
  maintenance 92
  minor adjustments 91
care, appearance 69
chain drive 64
chassis adjustments 95
choke knob 13
cleaner, air 40
cleaning, appearance care 69
clutch system, adjustment 44
competition logbook 113
consumer information 119
contacting Honda 121
controls, operating 5
coolant 38
customer service 121
cylinder system 47

D

damping adjustments,
  front 78
  rear 81
dealer, your Honda 122
diagram, wiring 118
drive chain 64

E

engine,
  flooded 13
  idle speed 91
  number 106
  pinging 34
  starting 13
  stop button 14
  stopping 14
  won’t start 13
environment, protecting 102
expansion chamber 67

F

filter,
  air 40
flooded engine, starting 13
fork,
  front suspension adjustment 72
  front suspension inspection 52
  oil recommendation 54
front brake lever adjustment 57
front suspension maintenance 72
fuel,
  line 35
  filter 35
  recommendation 34
  refueling 35
  system 34
  oxygenated 112
  tank capacity 35
  valve 13

G
gap, sparkplug 46
gasohol 112
gasoline.....34
gearing 96
guidelines, suspension adjustment 85

H
handlebar inspection.....68
high altitude carburetor adjustment.....111
Honda,
contacting 121
Rider's Club 123
Service Manual 120
your dealer.....122

I
identification, vehicle 106
idle speed, engine 91
inspection, pre-ride.....9

L
labels, safety 4
logbook, competition.....113

M
maintenance,
additional procedures 68
after competition 27
before & after competition.....26
between motos & practice.....26
component locations 28
general competition.....22
importance.....18
safety 19
schedule.....20
manual, service.....120
modifications 3

O
oil,
fork 54
transmission.....36
operating,
controls 5
instructions 11
operation component locations 6
optional,
parts list 115
sprockets.....96
oxygenated fuels.....112

P
pads, brake.....60
parts, optional 115
personal fit adjustments.....98
pinging, engine 34
plug, spark 46
pre-load, rear suspension.....80
pre-ride inspection.....9
protective apparel 2

R
rear suspension maintenance.....53
reed valve 49
Rider's Club Honda.....123
riding,
apparel 2
basic operation 11
before.....7
important safety information.....2
safety precautions.....12

S
safety,
a few words about .....Safety Messages
important information 2
important precautions.....2
labels 4
maintenance.....19
riding precautions.....12
schedule, maintenance.....20
serial numbers 106
service,
customer 121
manuals 120
spare parts.....117
spark knock 34
spark plug,
maintenance.....46
reading.....94
specifications 107,108
spring pre-load, rear suspension.....80
starting,
engine 13
troubleshooting.....103
steering stem inspection 68
stopping engine 14
storage 101
subframe 32
suspension,
front 52,72
rear.....53,80

(cont'd)

suspension adjustment,
front 72
rear 80
for track conditions 84
guidelines 85

T

transmission oil 36
tuning tips 88
throttle,
freeplay 42
inspection 43
tires,
air pressure 62
flat 62
selection 63
tools 117
torque specifications 109,110
transporting 100
troubleshooting 103
tubes, replacing 62

V

valve, fuel 13
valve, reed 49
vehicle identification no. (VIN) 106

W

washing your motorcycle 69
wheels 61
wiring diagram 118

Quick Reference

The following is a brief, but important collection of information you need to know about your Honda. You'll also find space to record important notes.

How To Avoid Costly Repairs

The engine of your Honda can be the most expensive component to repair. Proper maintenance, especially the use of the recommended fluids and filters, prevents premature wear and damage.

Frequent causes of costly engine repairs are:

- Transmission oil & premix oil: insufficient quantity, improper oil.
- Air cleaner: dirty, leaking because of improper installation (poor seal).

Record important information here:

VIN	
Engine No.	
Owner's:	
Name	
Address	
City/State	
Phone	
Dealer's:	
Name	
Address	
City/State	
Phone	
Service Mgr.	

Maintenance	The maintenance schedule (page 21) lists service frequencies for: each race or about 2.5 hours, every 3 races or about 7.5 hours, and every 9 races or about 22.5 hours						
Pre-ride Inspection	Check the items listed on the Pre-ride inspection checklist each time before you ride (page 9).						
Fuel/Capacity	unleaded gasoline, pump octane number of 91 or higher Premix: Pro Honda HP2 2-stroke Oil (32 : 1) Tank: 1.35 US gal (5.1 ℓ)						
Transmission oil	Pro Honda GN4 4-stroke engine oil, or an equivalent.						
Tires	CR85R	Front	70/100-17 40M	Rear	90/100-14 49M		
			DUNLOP K490G		DUNLOP K695		
		Type	bias-ply, tube				
	CR85RB	Front	70/100-19 42M	Rear	90/100-16 52M		
			DUNLOP K490		DUNLOP K695		
		Type	bias-ply, tube				
Tire Pressure (cold)	Front: 15 psi (100 kPa, 1.0kgf/cm²) Rear: 15 psi (100 kPa, 1.0kgf/cm²)						
Spark Plug	BR10EG (NGK)						
Coolant	ethylene glycol antifreeze (silicate-free) for aluminum engines in 50/50 solution with Pro Honda HP Coolant or equivalent distilled water.						
Drive Chain	RK420MSZ1						